2025 SIDE STREET IMPROVEMENTS, PHASE 1

EAST GEORGIA RUTH DRIVE

PROJECT LOCATION
GEORGIA RUTH DRIVE

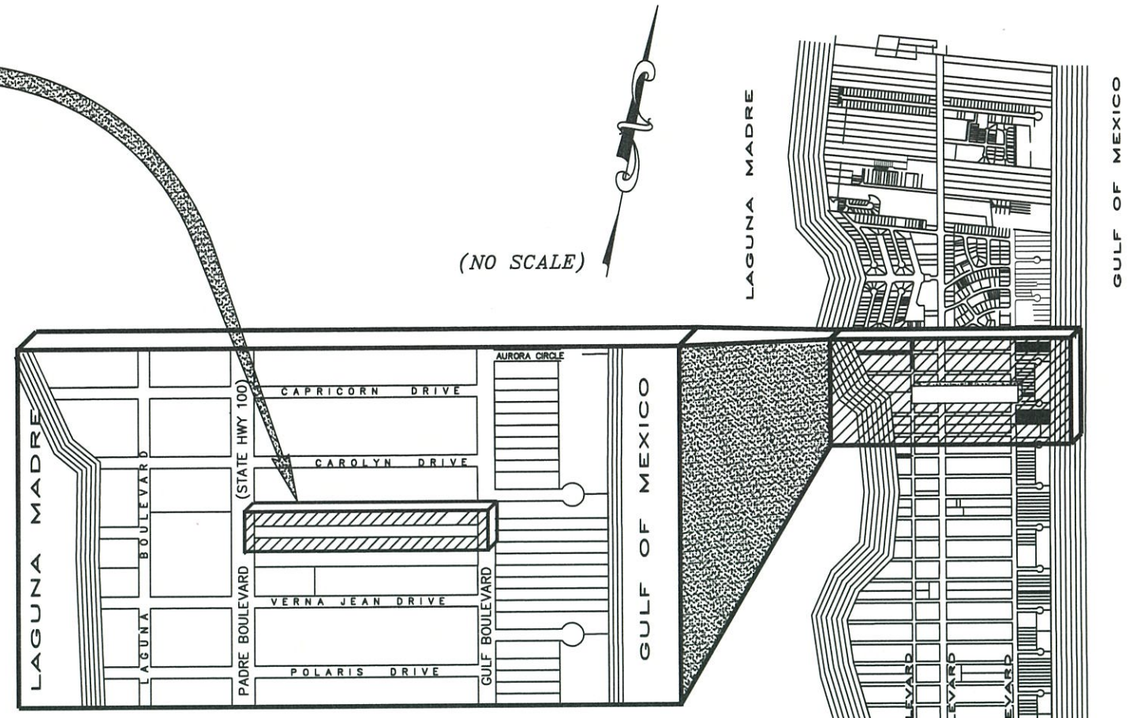

LOCATION MAP
(NO SCALE)

SOUTH PADRE ISLAND CITY COUNCIL

PATRICK McNULTY_ _ _ _ _ _ _MAYOR
REES LANGSTON_ _ _MAYOR-PRO TEM
JOE RICCO_ _ _ _ _ _ _ _ _ _MEMBER
KEN MEDDERS, JR._ _ _ _ _ _MEMBER
KERRY SCHWARTZ_ _ _ _ _ _MEMBER
LISA GRAVES_ _ _ _ _ _ _ _MEMBER

LOCAL UTILITY PROVIDER'S

LAGUNA MADRE WATER DISTRICT (LMWD)
DISTRICT OFFICE (PORT ISABEL, TX)
PHONE : (956-943-2626)

AMERICAN ELECTRIC POWER (AEP)
DISTRICT OFFICE (LOS FRESNOS, TX)
PHONE : (877-373-4858)

AMERICAN TELEPHONE & TELEGRAHIC CO. (AT&T)
COMPANY PARTNERSHIP
PHONE : (800-321-2000)

CHARTER COMMUNICATIONS LLC (SPECTRUM)
LIMITED LIABILITY COMPANY PARTNERSHIP
PHONE : (855-707-7328)

VICINITY/LOCATION MAP

ON

SOUTH PADRE ISLAND,

CAMERON COUNTY, TEXAS

(78597-8079)

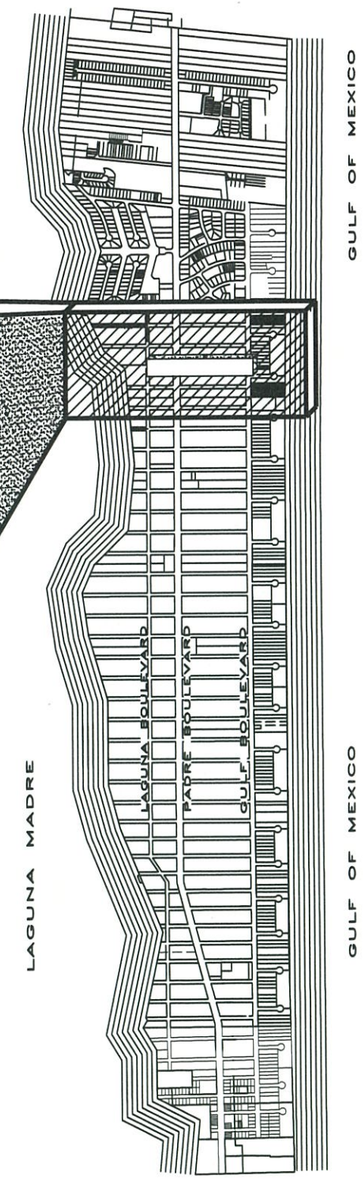

VICINITY MAP
(NO SCALE)

SHEET INDEX

DESCRIPTION	SHEET NO.
TITLE SHEET (EAST GEORGIA RUTH DRIVE)	1
GENERAL NOTE SHEET AND ABBREVIATIONS	2
TOPOGRAFIC SURVEY SHEET	3
HORIZONTAL CONTROL PLAN	4
REMOVE/RELOCATE/REPLACE AND ADJUST PLAN	5
PLAN & PROFILE SHEET (STA. 10+50 THRU STA. 14+00)	6
PLAN & PROFILE SHEET (STA. 14+00 THRU STA. 17+50)	7
PLAN & PROFILE SHEET (STA. 17+50 THRU STA. 20+55)	8
TITLE SHEET (EAST CONSTELLATION DRIVE)	9
TOPOGRAFIC SURVEY SHEET	10
HORIZONTAL CONTROL PLAN	11
REMOVE/RELOCATE/REPLACE AND ADJUST PLAN	12
PLAN & PROFILE SHEET (STA. 10+50 THRU STA. 14+00)	13
PLAN & PROFILE SHEET (STA. 14+00 THRU STA. 17+50)	14
PLAN & PROFILE SHEET (STA. 17+50 THRU STA. 20+75)	15
TITLE SHEET (WEST GARDENIA DRIVE)	16
TOPOGRAFIC SURVEY SHEET	17
HORIZONTAL CONTROL PLAN	18
REMOVE/RELOCATE/REPLACE AND ADJUST PLAN	19
PLAN & PROFILE SHEET (STA. 10+70 THRU STA. 14+00)	20
PLAN & PROFILE SHEET (STA. 14+00 THRU STA. 14+30)	21
PAVEMENT AND CURB DETAILS	22
TYPICAL STREET SECTION AND SIDEWALK RAMP (GEORGIA RUTH)	23
TYPICAL STREET SECTION AND SIDEWALK RAMP (CONSTELLATION)	23A
TYPICAL STREET SECTION AND SIDEWALK RAMP (GARDENIA)	23B
SITE DETAIL SHEET	24
DRAINAGE DETAIL SHEET	25
TRAFFIC CONTROL PLAN	26
BARRICADE AND CONSTRUCTION GENERAL NOTE SHEET	27
SWP3 DETAILS	28
ADA RAMP DETAIL SHEET	29

BASIS OF BEARINGS
BEARINGS OF LINE REFER TO GRID NORTH OF OF THE TEXAS COORINATE SYSTEM OF 1983 (SOUTH CENTRAL ZONE) AS COMPUTED FROM GPS VECTORS.

NGS DATA MONUMENTION
NATIONAL GEODETIC SURVEY (AB1247) NE CORNER OF PADRE BLVD. AND MARISOL DRIVE (ELEV. = 4.81)

BENCHMARK NO. 1
"X" MARK ON TOP OF INLET SW CORNER OF PADRE BOULEVARD AND GEORGIA RUTH (ELEV. = 2.72)

BENCHMARK NO. 2
"X" MARK AT TOP OF DRIVEWAY STA 15+95. NORTH SIDE OF ROADWAY (ELEV. = 5.22)

BENCHMARK NO. 3
TOP OF NUT AT FIRE HYDRANT SE CORNER OF GULF BOULEVARD AND GEORGIA RUTH (ELEV. = 10.00)

10-15-2025
STATE OF TEXAS
CARLOS ALEJANDRO SANCHEZ
93914
LICENSED
PROFESSIONAL ENGINEER

Know what's below. Call before you dig.

REV.	DATE	DESCRIPTION

2025 SIDE STREET IMPROVEMENTS PHASE 1
(EAST GEORGIA RUTH DRIVE)

TITLE SHEET

South Padre ISLAND

PUBLIC WORKS
4601 PADRE BLVD,
SOUTH PADRE ISLAND
TEXAS 78597
(956) 761-8158

SCALE: NONE
DRAWN BY: CAS/DWB
DATE: 08/29/2025
FILE: EAST GEORGIA RUTH

SHEET 1 OF 29

PROJECT NOTES:

1. THE LOCATION, ELEVATIONS AND DIMENSIONS OF ALL EXISTING UTILITIES SHOWN ON THE PLANS WERE OBTAINED FROM AVAILABLE UTILITY COMPANY RECORDS AND PLANS WHICH ARE CONSIDERED APPROXIMATES. IT SHALL BE THE CONTRACTOR'S RESPONSIBILITY TO COORDINATE WITH UTILITY COMPANIES TO VERIFY LOCATIONS, ELEVATIONS, AND DIMENSIONS OF ADJACENT AND/OR CONFLICTING UTILITIES SUFFICIENTLY IN ADVANCE OF CONSTRUCTION IN ORDER THAT ADJUSTMENTS CAN BE MADE TO PROVIDE ADEQUATE CLEARANCES.

2. THE CONTRACTOR SHALL BE RESPONSIBLE IN MARKING ALL UTILITIES BEFORE COMMENCING CONSTRUCTION. CONTRACTOR TO NOTIFY TEXAS 811 (800-DIG-TESS OR WWW.TEXAS811.ORG).

3. THE CONTRACTOR SHALL PRESERVE AND PROTECT PUBLIC UTILITIES AT ALL TIMES DURING CONSTRUCTION. ANY DAMAGE TO UTILITIES RESULTING FROM CONTRACTOR'S OPERATIONS SHALL BE RESTORED AT HIS EXPENSE. UTILITY COMPANIES SHALL BE NOTIFIED AT LEAST TEN (10) DAYS IN ADVANCE OF CONSTRUCTION.

4. THE CONTRACTOR SHALL BE RESPONSIBLE IN PROVIDING ALL CONSTRUCTION STAKING.

5. PREPARATION OF RIGHT OF WAY FOR CONSTRUCTION OPERATIONS SHALL INCLUDE REMOVAL AND DISPOSAL OF ALL OBSTRUCTIONS FROM THE RIGHT OF WAY AND FROM DESIGNATED EASEMENT. THIS ITEM SHALL INCLUDE THE REMOVAL OF TREES AND SHRUBS AND OTHER LANDSCAPE FEATURES NOT DESIGNATED FOR PRESERVATION OR RELOCATED.

6. THE CONTRACTOR SHALL BE RESPONSIBLE TO HAVE REPAIRED ANY DAMAGE TO STREETS OF THE CITY CAUSED BY DELIVERY OF MATERIALS AND/OR SUPPLIED TO THE CONSTRUCTION SITE, OR BY THE OPERATION OF EQUIPMENT AND SHALL MAKE REPAIRS IN THE MANNER AND TIME PROVIDED BY CITY INSPECTOR.

7. NON-RUBBER WHEELED VEHICLES ARE PROHIBITED FROM BEING PLACED UPON OR OPERATED UPON ANY PAVED STREET WITHIN THE CITY. (Ord. No. 71A, 8-4-1982)

8. THE CONTRACTOR SHALL REMOVE ALL SURPLUS MATERIAL FROM THE PROJECT AREA. THIS WORK SHALL BE SUBSIDIARY TO THE CONTRACT AND IS NOT A SEPARATE PAY ITEM.

9. NO PERSON MAY REMOVE OR OTHERWISE DISPOSE OF ANY FILL MATERIALS THAT ARE GENERATED AS A RESULT OF EXCAVATION WORK WITHIN THE CITY RIGHT-OF-WAYS WITHOUT THE PRIOR APPROVAL OF THE CITY. (Ord. No. 86, 11-24-1980)

10. ALL MATERIALS GENERATED AS A RESULT OF EXCAVATION OR WORK DONE WITHIN THE CITY'S RIGHT-OF-WAYS SHALL FIRST BE OFFERED TO THE CITY FOR USE AND/OR DISPOSAL. IF THE CITY HAS NO USE FOR SAID MATERIALS, THEN THE PARTY EXCAVATING MAY DISPOSE OF THE MATERIALS IN ANY OTHER MANNER hE SEES FIT, EXCEPT THAT NO EXCAVATED MATERIALS REMOVED FROM THE CITY'S RIGHT-OF-WAY MAY BE REMOVED FROM THE CITY'S CITY LIMITS. (Ord. No. 86, 11-24-1980)

11. EXCAVATED FILL MATERIALS REMOVED FROM THE CITY'S RIGHT OF WAY WILL BE USED ON DESIGNATED AREAS WITHIN THE CITY LIMITS OF THE CITY. THE CITY LIMITS IS A TOTAL OF 6.7 MILES LONG AND 0.40 MILES WIDE. THE CITY HAS A LIST OF LOTS (50'x125' TYPICAL) IN WHICH IT MAY BE DISPOSED OF. THE EXCAVATED MATERIAL MUST BE FREE OF DEBRIS.

12. THE CONTRACTOR SHALL NOT MIX BROKEN CONCRETE AND SALVAGE MATERAIL WITH EXCAVATED FILL DIRT. THE CONTRACTOR SHALL HAVE THREE SEPRATE PILES IN ORDER TO PREVENT CROSS CONTAMINATION.

13. ALL CONCRETE DEBRIS FROM REMOVAL OF DRIVEWAYS AND REMOVAL OF STORM DRAINAGE INELT, MANHOLES, PIPES, ETC. SHALL BE REMOVED WITH 15 DAYS OF THE DATE OF REMOVAL AND SHALL BE DESPOSED OFF PROPERLY. THE REMOVAL OF THE DEBRIS WILL BE SUSIDERY TO THE REMOVAL LINE ITEMS.

14. THE CONTRACTOR SHALL BE RESPONSIBLE IN OBTAINING ALL REQUIRED PERMITS. A RIGHT OF WAY (R.O.W.) PERMIT AND EASEMENT PERMIT SHALL BE OBTAINED PRIOR TO ANY CONSTRUCTION WORK ON CITY R.O.W. OR EASEMENT RESPECTIVELY.

15. CONTRACTOR WILL NOT BLOCK DRAINAGE WHEN HANDLING AND STOCKPILING EXCAVATED MATERIAL AND SHALL MAINTAIN POSITIVE DRAINAGE DURING ALL PHASES OF CONSTRUCTION.

16. CONTRACTOR TO MAINTAIN ACCESS TO DRIVEWAYS AND INTERSECTIONS THROUGH ALL PHASES OF CONSTRUCTION.

17. FOR PROPERTIES WITH A SINGLE DRIVE, DRIVEWAYS SHALL BE CONSTRUCTED SO THAT ONE HALF OF THE DRIVE IS OPEN AT ALL TIMES. IF CONSTRUCTING THE DRIVE IN TWO HALVES WILL NOT ALLOW ACCESS TO THE PROPERTY, TEMPORARY ALL-WEATHER ACCESS SHALL BE PROVIDED. NO PORTION OF THE DRIVE SHALL BE CLOSED FOR A PERIOD LONGER THAN CALENDAR DAYS.

18. ALL CONSTRUCTION SHALL BE PERFORMED IN ACCORDANCE WITH THE CITY OF SOUTH PADRE ISLAND SPECIFICATIONS UNLESS OTHERWISE ON THE APPROVED PLANS. CONTRACTOR SHALL BECOME FAMILIAR WITH CITY SPECIFICATIONS.

19 TRENCH EXCAVATIONS WITH A DEPTH OF 5 FEET OR MORE SHALL HAVE APPROPRIATE TRENCH PROTECTION SUCH AS SHEETING, SHORING AND BRACING PER OCCUPATIONAL SAFETY AND HEALTH ADMINISTRATION (OSHA) STANDARDS. THE CONTRACTOR SHALL ABIDE BY ALL APPLICABLE FEDERAL, STATE AND LOCAL LAWS GOVERNING EXCAVATION. TRENCH SIDE SLOPES SHALL MEET OSHA STANDARDS THAT ARE IN EFFECT AT THE TIME OF CONSTRUCTION.

20. CONTRACTOR TO PROTECT EXPOSED PITS THAT MUST REMAIN OPEN DURING NON-WORKING HOURS AS PER OSHA REQUIREMENTS.

21. CONTRACTOR SHALL PROVIDE TEMPORARY FENCING TO PROTECT PEDESTRIANS FROM ANY ACTIVE WORK SITES AREA.

22. MOBILIZATION SHALL BE IN ACCORDANCE TXDOT ITEM 500. THE CONTRACTOR SHALLL BE AWARE THAT THE RIGHT-OF-WAY IS LIMITED TO 50' AND EMPTY LOTS NEAR THE CONSTRUCTION SITE MAY BE LIMITED IN THE AMOUNT AND SIZE. THE CONTRACTOR SHALL BE RESPONSIBLE IN OBTAINING ITS OWN CONSTRUCTION STAGING AREA(S). ANY STAGING AREAS, ELECTED TO BE USED SHALL BE MAINTAINED. THE CITY HAS AN ORDIANCE FOR GARBAGE, TRASH, WEEDS AND OTHER WASTE MATERIAL. ANY TEMPORARY STUCTURE TO BE USED SHALL COMPLY WITH CITY ORDIANCE SECTON 20-11 (D).

23. TRAFFIC CONTROL SHALL BE IN COMPLIANCE WITH TXMUTCD and TxDOT ITEM 502.

SURVEY NOTES:

1. THE SURVEY AND ELEVATIONS WERE OBTAINED BY THE CITY USING A TRIMBLE R12i BASED ON NGS DATA.
2. BENCHMARK INFORMATION ARE SHOWN ON VARIOUS PLAN SHEETS.
3. THE CONTRACTOR SHALL VERIFY BENCHMARKS FOR ACCURACY AND VERIFY EXISTING ELEVATIONS BEFORE SETTING GRADES. CITY STAFF WILL WORK CLOSELY WITH THE CONTRACTOR TO MAKE ANY PROPOSED ELEVATION ADJUSTMENTS, IF NEEDED.
4. CONTRACTOR WILL BE RESPONSIBLY FOR CONSTRUCTION STAKING.

LANDSCAPIING NOTES:

1. RELOCATION OF TREES: PALM TREE RELOCATED (DRAGGED) WITHIN 10' HAVE A HIGHER RECOVERY RATE. PALM TREES ARE TO BE RELOCATED WITHIN THE PROJECT AREA IF POSSIBLE. WOST CASE SENERIO, THE PALM TREES WILL BE RELOCATED FROM THE PROJECT SITE TO THE MEDIANS AT THE ENTRANCE OF THE CITY. THE FURTHEREST DISTANCE FOR RELOCATION WILL BE 3.4 MILES.
2. LANDSCAPE PLANTING SHALL BE IN COMPLIANCE WITH TxDOT ITEM 192, UNLESS OTHERWISE SPECIFIED.
3. PER THIS CONTRACT THE LANDSCAPE MATERIAL BID ITEM COSTS SHALL BE FOR MATERIAL, LABOR AND EQUIPMENT TO BE INSTALLED BY THE CONTRACTOR OR SUB-CONTRACTOR.
4. ANY PALM TREE THAT IS REMOVED SHALL BE REPLACED WITH A NEW PALM WITH MINIMUM 6' TRUNK HEIGHT.
5. MAINTENACE OF LANDSCAPING SHALL BE THE RESPONSIBILITY OF THE CONTRACTOR BEGINING ONCE THE INSTALLATION IS IN PLACE UP TO FINAL ACCEPTANCE. CITY WILL MAINTAIN LANDSCAPING AFTER FINAL ACCEPTANCE.

DRAINAGE NOTES:

1. CITY OF SOUTH PADRE ISLAND ELVATION RANGES FROM APPROXIMATELY 2.5' ABOVE SEA LEVEL CLOSER TO THE BAY AND APPROXIMAELTY 11' ABOVE SEA LEVEL NEAR GULF BOULEVARD. MEAN SEA LEVEL IS APPROXIMATELY 1.0' DEPENDANT ON THE TIDES.
2. CONTRACTOR SHALL ANTICIPATE ANY DRAINAGE WORK WILL ENCOUNTER GROUNDWATER.

ABBREVIATIONS

▷PT.	ANGLE POINT	RDWY	ROADWAY
℄	CENTERLINE	EXIST.	EXISTING
ROW	RIGHT OF WAY	CONC.	CONCRETE
B/B	BACK TO BACK (C&G)	DR.	DRIVEWAY
C&G	CURB AND GUTTER	FG	FINISHED GRADE
STA.	STATION	FL	FLOWLINE
SF	SQUARE FEET	EW	EACH WAY
LF	LINEAR FEET	SY	SQUARE YARDS
PROP.	PROPOSED	S	SLOPE
(L)/(R)	LEFT/RIGHT	TYP	TYPICAL
G	GUTTER	TOP	TOP OF PIPE
EA.	EACH	S/W	SIDEWALK
SS	SANITARY SEWER	T&G	TONGUE AND GROOVE
W	POTABLE WATER	RCP	REINFORCED CONCRETE PIPE
ASP	ASPHALT		
BLVD.	BOULEVARD	INT.	INTERSECTION
XX.XX / FL	PROPOSED ELEVATION	(XX.XX) / EX.FL	EXISTING ELEVATION

10-15-2025

STATE OF TEXAS
CARLOS ALEJANDRO SANCHEZ
93914
LICENSED
PROFESSIONAL ENGINEER

REV.	DATE	DESCRIPTION

2025 SIDE STREET IMPROVEMENTS PHASE 1

GENERAL NOTE SHEET AND ABBREVIATIONS

South Padre ISLAND

PUBLIC WORKS

4601 PADRE BLVD, SOUTH PADRE ISLAND TEXAS 78597 (956) 761-8158

NO SCALE
DRAWN BY: CAS/DWB
DATE: 08/29/2025
FILE: EAST GEORGIA RUTH

SHEET 2 OF 29

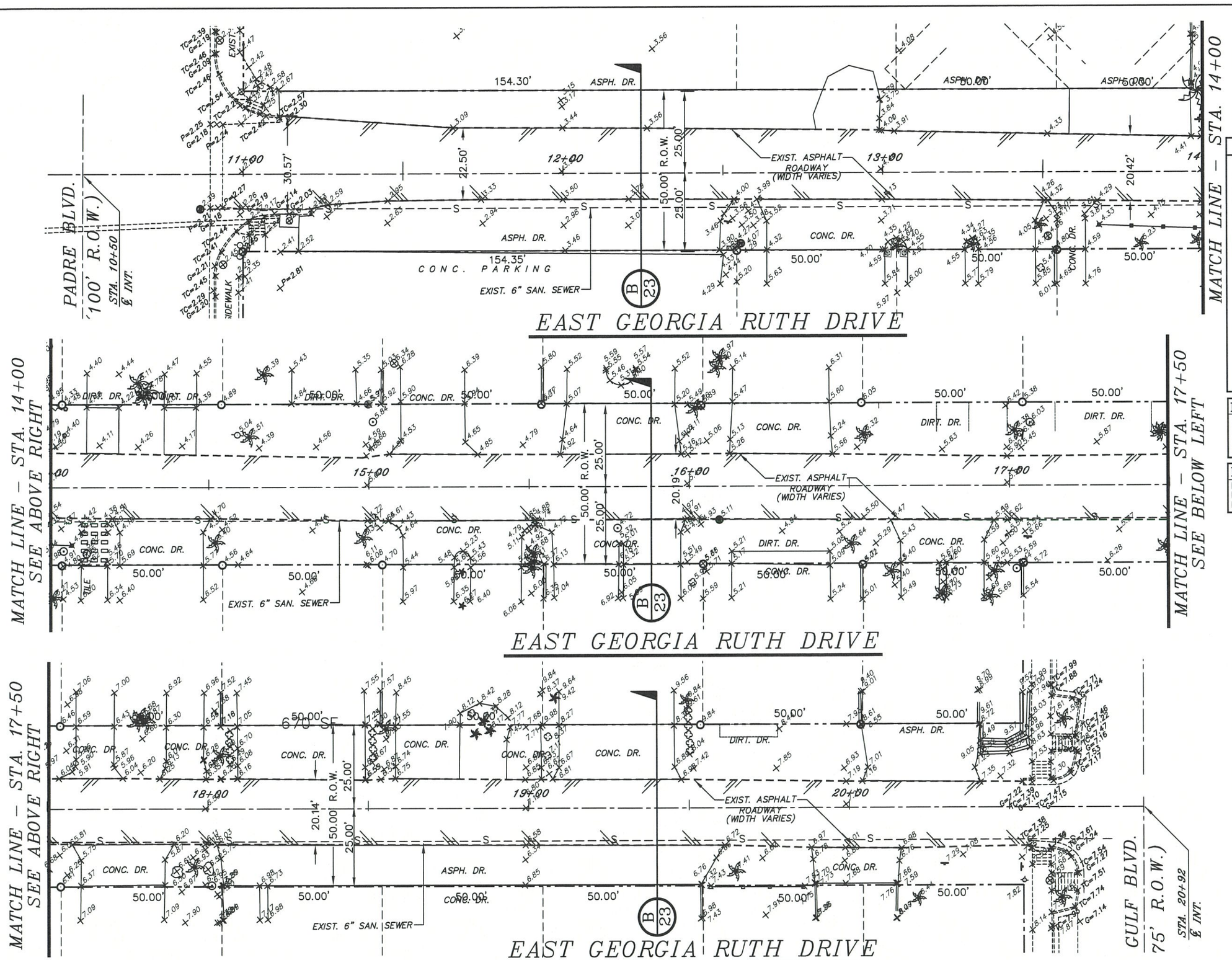

GRAPHIC SCALE

0 15 30

(IN FEET)

1 inch = 30 ft.

LEGEND	
	EXIST. CENTERLINE
	EXIST. CONCRETE
	EXIST. SAN SEW. LINE
	EXIST. ROW LINE
	EXIST. EDGE OF PAVEMENT
	EXIST. SAN. SEW. MANHOLE
	EXIST. IRON PIN FD.
	EXST. CONC. MON. FD.
	EXIST. PALM TREE
	EXIST. SMALL TREE
	EXISTING CENTERLINE
4.93	EXISTING ELEVATION

BASIS OF BEARINGS

BEARINGS OF LINE REFER TO GRID NORTH OF OF THE TEXAS COORINATE SYSTEM OF 1983 (SOUTH CENTRAL ZONE) AS COMPUTED FROM GPS VECTORS.

NGS DATA MONUMENTION

NATIONAL GEODETIC SURVEY (AB1247)
NE CORNER OF PADRE BLVD. AND MARISOL DRIVE (ELEV. = 4.81)

STATE OF TEXAS
CARLOS ALEJANDRO SANCHEZ
93914
LICENSED
PROFESSIONAL ENGINEER

10-15-2025

REV.	DATE	DESCRIPTION

2025 SIDE STREET IMPROVEMENTS PHASE 1
(EAST GEORGIA RUTH DRIVE)

TOPOGRAFIC SURVEY SHEET

South Padre ISLAND

PUBLIC WORKS

4601 PADRE BLVD,
SOUTH PADRE ISLAND
TEXAS 78597
(956) 761-8158

SCALE: 1"=30'
DRAWN BY: CAS/DWB
DATE: 08/29/2025
FILE: EAST GEORGIA RUTH

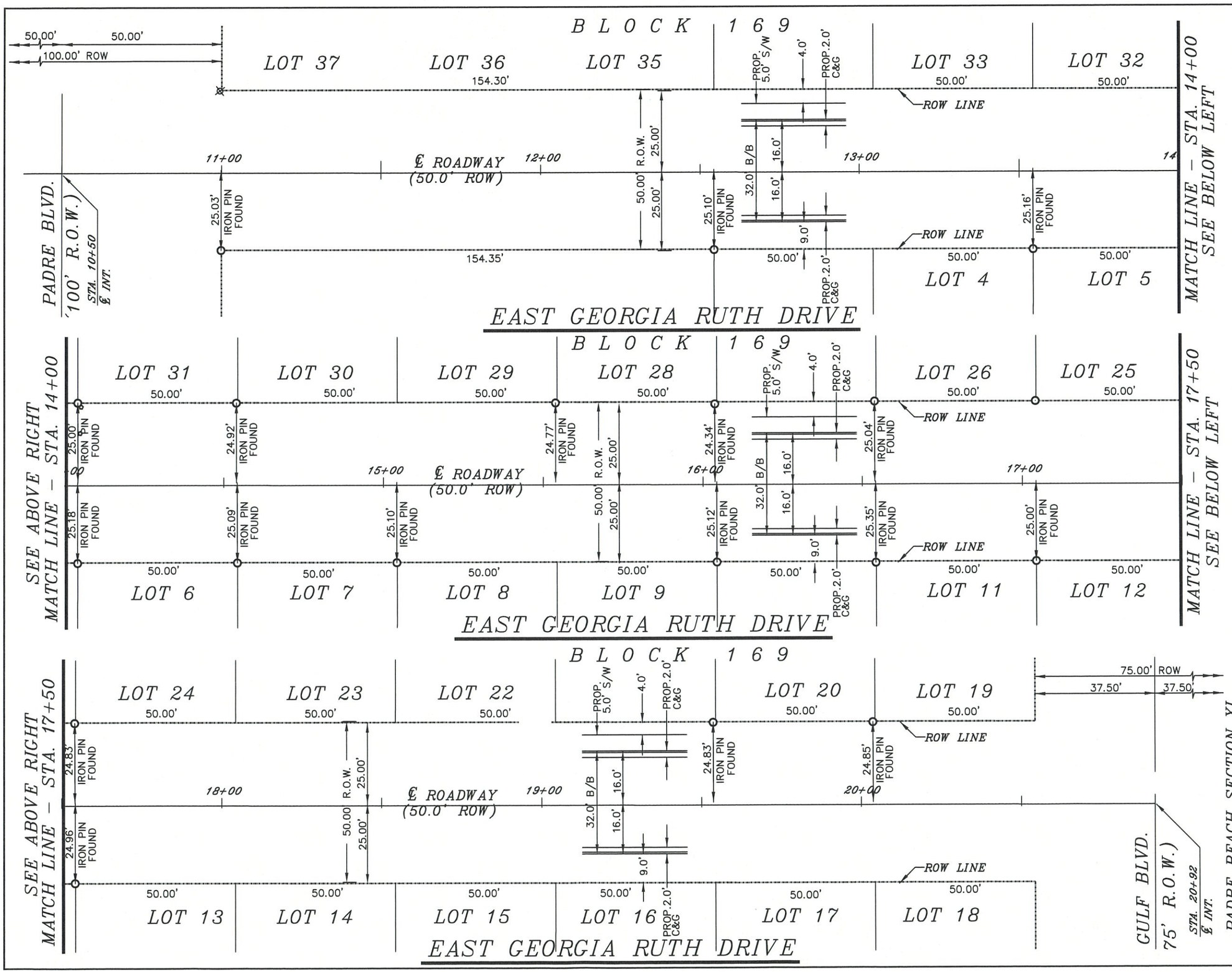

GRAPHIC SCALE

0 15 30

(IN FEET)
1 inch = 30 ft.

LEGEND	
———	EXIST. CENTERLINE
— - - —	EXIST. ROW LINE
○	EXIST. IRON PIN FD.
○	EXST. CONC. MON. FD.
℄	EXISTING CENTERLINE

BASIS OF BEARINGS

BEARINGS OF LINE REFER TO GRID NORTH OF OF THE TEXAS COORINATE SYSTEM OF 1983 (SOUTH CENTRAL ZONE) AS COMPUTED FROM GPS VECTORS.

NGS DATA MONUMENTION

NATIONAL GEODETIC SURVEY (AB1247)
NE CORNER OF PADRE BLVD. AND MARISOL DRIVE (ELEV. = 4.81)

10-15-2025

STATE OF TEXAS
CARLOS ALEJANDRO SANCHEZ
93914
LICENSED
PROFESSIONAL ENGINEER

REV.	DATE	DESCRIPTION

2025 SIDE STREET IMPROVEMENTS PHASE 1
(EAST GEORGIA RUTH DRIVE)

HORIZONTAL CONTROL PLAN

South Padre ISLAND

PUBLIC WORKS
4601 PADRE BLVD.
SOUTH PADRE ISLAND
TEXAS 78597
(956) 761-8158

SCALE: 1"=30'
DRAWN BY: CAS/DWB
DATE: 08/29/2025
FILE: EAST GEORGIA RUTH

SHEET 4 OF 29

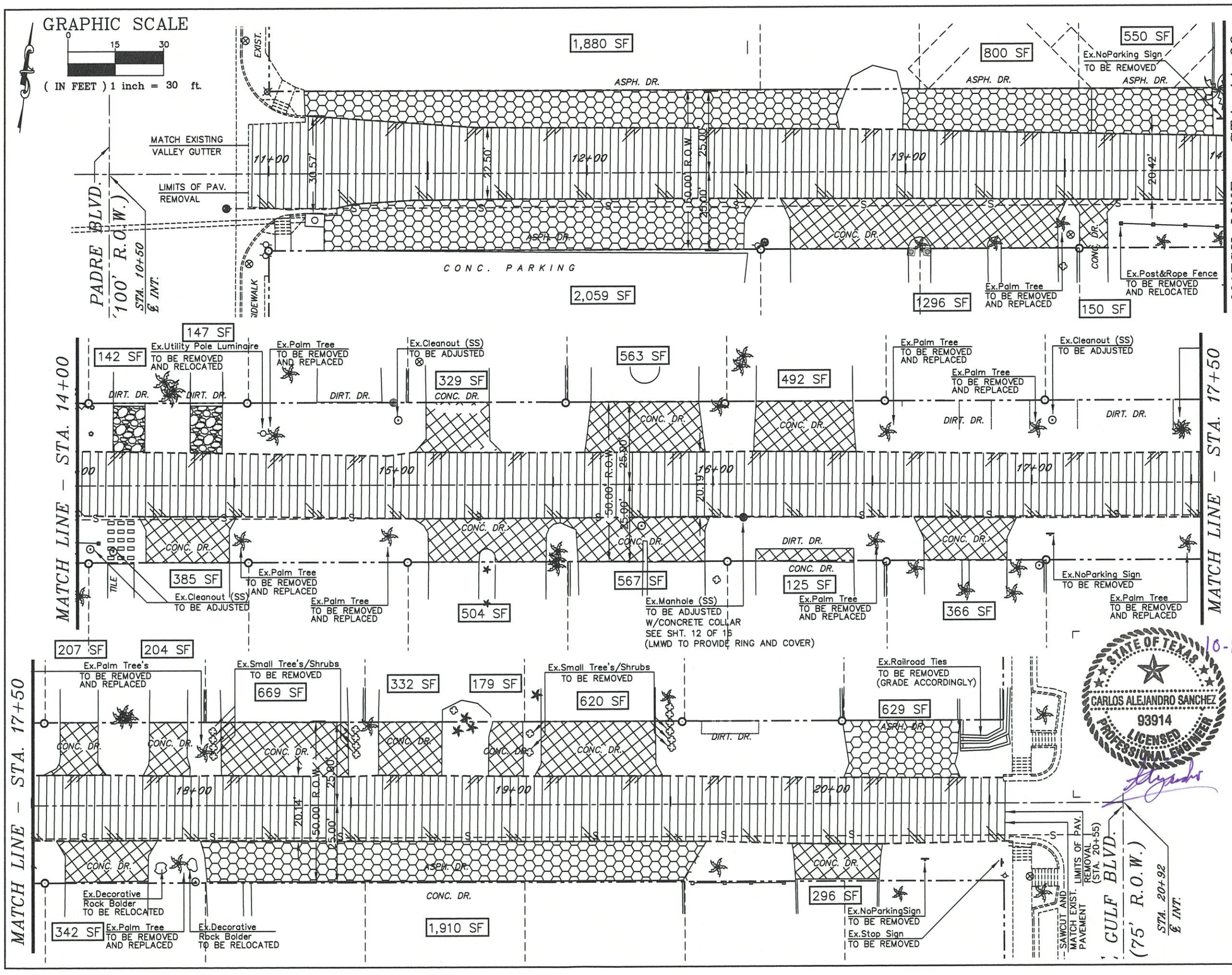

LEGEND

	REMOVE EXISTING CONCRETE DRIVEWAY (APPROACH)
	REMOVE EXISTING PAVEMENT DRIVEWAY (APPROACH)
	REMOVE EXISTING DRIVEWAY PAVERS (APPROACH)
	REMOVE EXISTING GRAVEL DRIVEWAY (APPROACH)
	REMOVE EXISTING ROADWAY PAVEMENT OR REUSE AS BASE SALAVAGED MATERIAL

EXISTING QUANTITY ESTIMATE

01 LS.	REMOVE EXISTING RAILROAD TIES
04 EA.	ADJUST EXISTING CLEANOUT (San.Sew.)
01 EA.	ADJUST EXISTING MANHOLE (San.Sew.)
01 EA.	RELOCATE EXISTING UTILITY POLE (Luminair)
03 EA.	REMOVE EXISTING STREET SIGN
12 EA.	REMOVE EXISTING SMALL TREE OR SHRUB
11 EA.	REMOVE AND REPLACE EXISTING PALM TREE
847 SY	REMOVE EXISTING CONCRETE DRIVEWAY
870 SY	REMOVE EXISTING ASPHALT DRIVEWAY
32 SY	REMOVE EXISTING GRAVEL DRIVEWAY
15± EA	REMOVE EXISTING DRIVEWAY PAVERS
2,305 SY	REMOVE EXISTING ROADWAY PAVEMENT OR REUSE AS BASE MATERIAL

STATE OF TEXAS
CARLOS ALEJANDRO SANCHEZ
93914
LICENSED
PROFESSIONAL ENGINEER
10-15-2025

2025 SIDE STREET IMPROVEMENTS PHASE 1
(EAST GEORGIA RUTH DRIVE)

REMOVE/REPLACE/RELOCATE AND ADJUST PLAN

South Padre ISLAND

PUBLIC WORKS

4601 PADRE BLVD,
SOUTH PADRE ISLAND
TEXAS 78597
(956) 761-8158

SCALE: 1"=30'	SHEET
DRAWN BY: CAS/DWB	5
DATE: 07/29/2025	OF 29
FILE: EAST GEORGIA RUTH	

DISCLAIMER

QUANTITIES ARE ONLY ESTIMATES, CONTRACTOR TO VERIFY. ENGINEER TO BE NOTIFIED IMMEDIATELY OF ANY DISCREPANCIES.

ALL WET AND DRY UTILITY LOCATIONS ARE THE RESPONDSIBILTY OF THE CONTRACTOR.

CAUTION

CONTRACTOR TO MAINTAIN THE SEPERATION OF SAN. SEWER AND STORM SEWER PER TCEQ STANADRS. IMEDIATLY NOTIFY THE ENGINEER OF RECORD AND LMWD OF ANY DIRECT CONFLICTS.

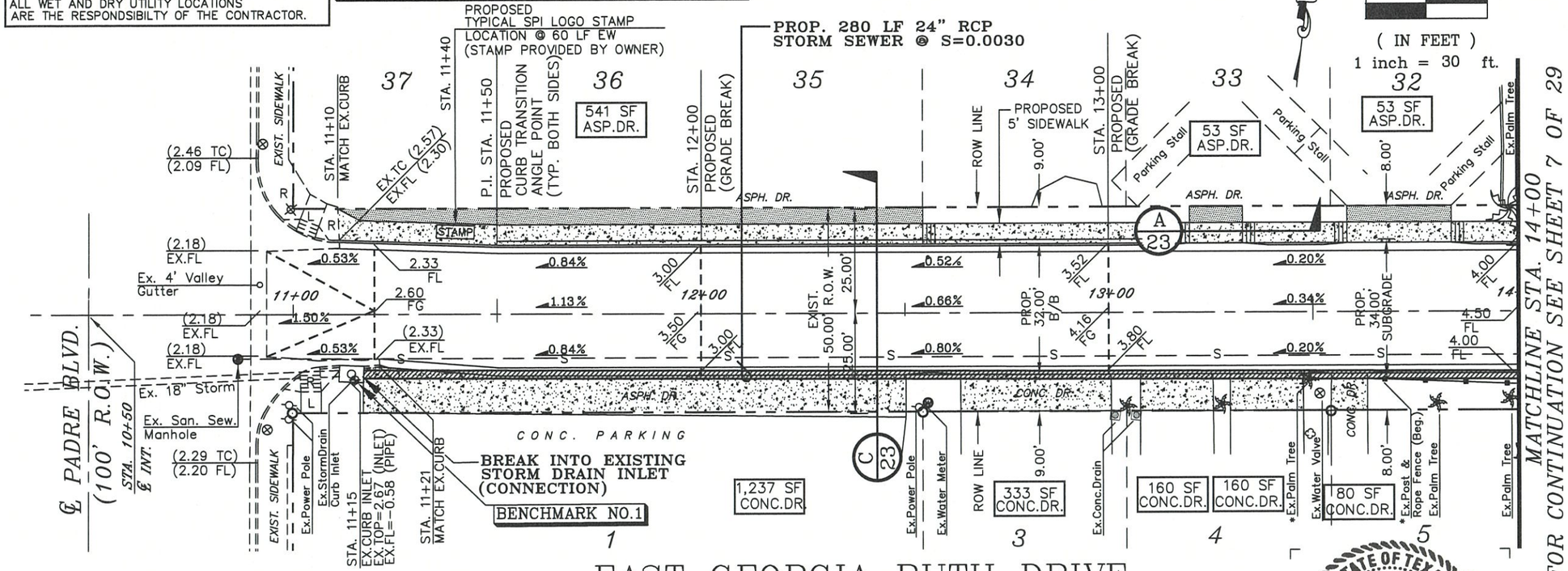

EAST GEORGIA RUTH DRIVE
(50' R.O.W.)

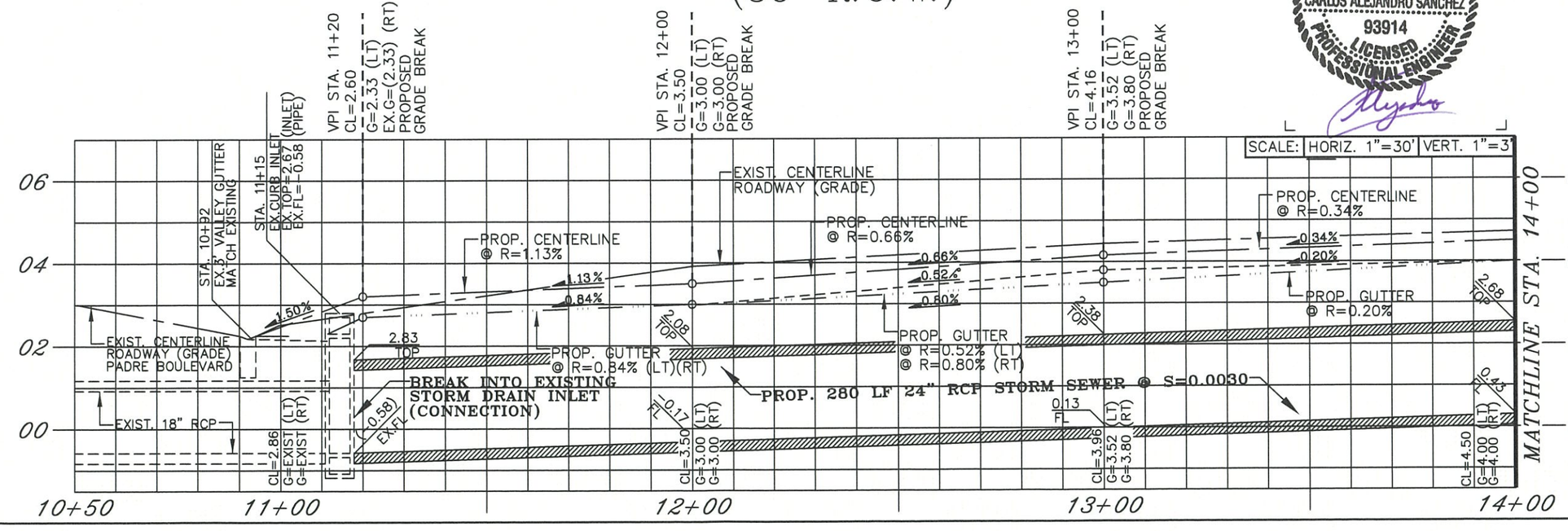

LEGEND	
	EXIST. CENTERLINE
	PROP. CENTERLINE
	PROP. LEFT GUTTER
	PROP. RIGHT GUTTER
	PROP. GRADE BREAK
	EXIST. SAN SEW. LINE
	EXIST. RIGHT OF WAY
	PROP.CONCRETE
R L R	PROP. DRIVEWAY RAMP L=LANDING/R=RAMP
S	EXIST. SAN, SEW. MANHOLE
	EXIST. IRON PIN FD.
	EXST. CONC. MON. FD.
	EXIST. PALM TREE
	EXIST. SMALL TREE
STAMP	PROP. SPI LOGO STAMP
XXX SF DRIVE	PROP. DRIVEWAY QUANTITY (CONCRETE OR ASPHALT)
*	SEE REMOVAL PLAN SHT. 5

PROPOSED QUANTITY ESTIMATE		
DESCRIPTION	UNIT	QTY.
CURB AND CUTTER	LF	570
DRIVEWAY RAMP (SIDEWALK)	EA	05
5' WIDE CONCRETE SIDEWALK	SY	161
ASPHALT DRIVEWAY	SY	72
CONCRETE DRIVEWAY	SY	219
STAMPED SPI LOGO	EA	05
24" RCP STORM (T&G)	LF	280
STORM DRAIN CONNECTION	EA	01

BENCHMARK NO. 1

"X" MARK ON TOP OF INLET SW CORNER OF PADRE BOULEVARD AND GEORGIA RUTH (ELEV. = 2.72)

STATE OF TEXAS
CARLOS ALEJANDRO SANCHEZ
93914
LICENSED
PROFESSIONAL ENGINEER
10-15-2025

811 Know what's below. Call before you dig.

REV.	DATE	DESCRIPTION

2025 SIDE STREET IMPROVEMENTS PHASE 1
(EAST GEORGIA RUTH DRIVE)

PLAN & PROFILE SHEET
(STA. 10+50 TO STA. 14+00)

South Padre ISLAND

PUBLIC WORKS
4601 PADRE BLVD.
SOUTH PADRE ISLAND
TEXAS 78597
(956) 761-8158

SCALE: 1"=30'
DRAWN BY: CAS/DWB
DATE: 08/29/2025
FILE: EAST GEORGIA RUTH

SHEET 6 OF 29

DISCLAIMER

QUANTITIES ARE ONLY ESTIMATES, CONTRACTOR TO VERIFY. ENGINEER TO BE NOTIFIED IMMEDIATELY OF ANY DISCREPANCIES.

ALL WET AND DRY UTILITY LOCATIONS ARE THE RESPONDSIBILTY OF THE CONTRACTOR.

CAUTION

CONTRACTOR TO MAINTAIN THE SEPERATION OF SAN. SEWER AND STORM SEWER PER TCEQ STANADRS. IMEDIATLY NOTIFY THE ENGINEER OF RECORD AND LMWD OF ANY DIRECT CONFLICTS.

GRAPHIC SCALE

0 15 30

(IN FEET)
1 inch = 30 ft.

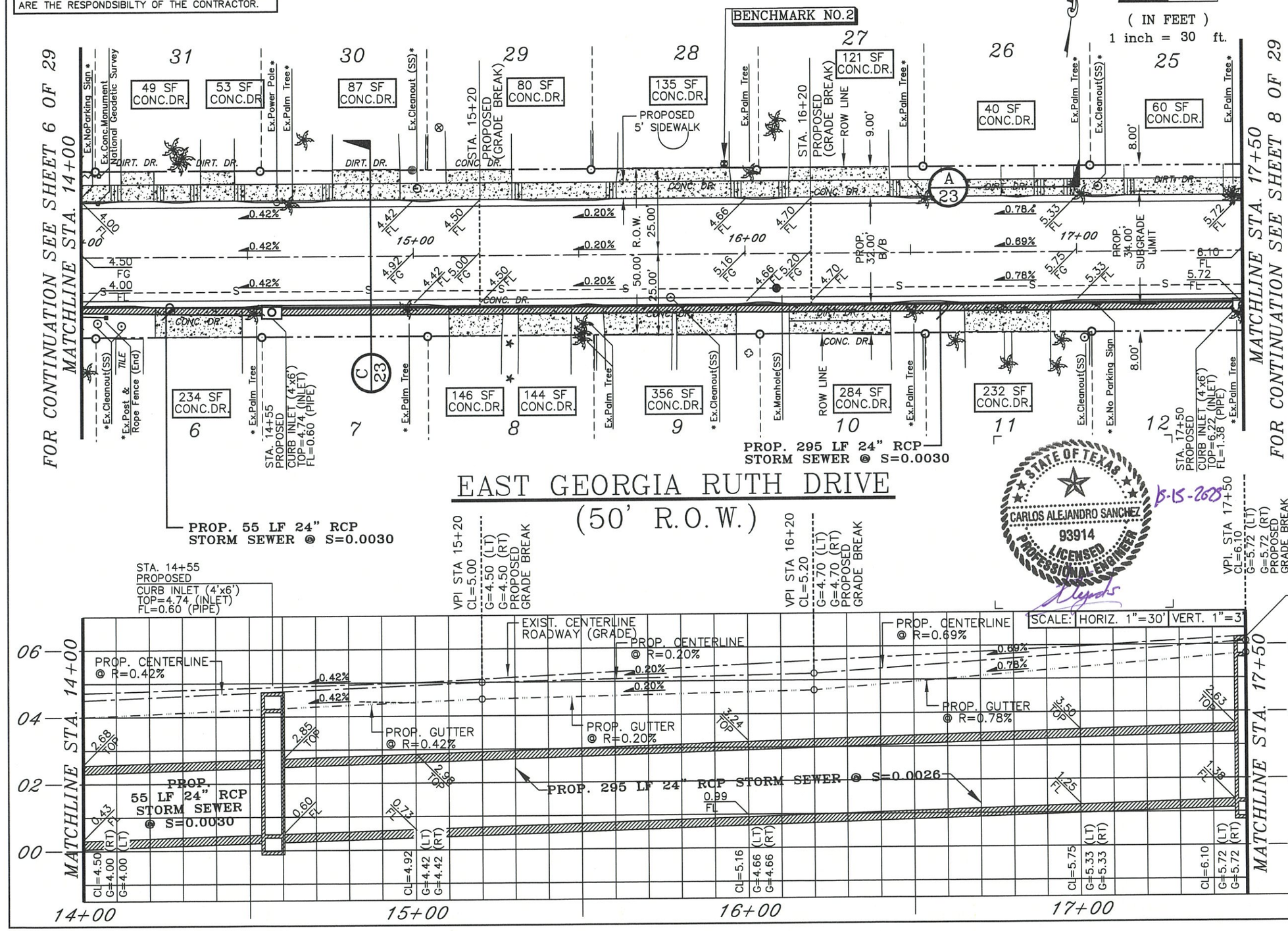

STATE OF TEXAS
CARLOS ALEJANDRO SANCHEZ
93914
LICENSED PROFESSIONAL ENGINEER
8-15-2025

LEGEND

	EXIST. CENTERLINE
	PROP. CENTERLINE
	PROP. LEFT GUTTER
	PROP. RIGHT GUTTER
	PROP. GRADE BREAK
	EXIST. SAN SEW. LINE
	EXIST. RIGHT OF WAY
	PROP.CONCRETE
R L R	PROP. DRIVEWAY RAMP L=LANDING/R=RAMP
S	EXIST. SAN, SEW. MANHOLE
	EXIST. IRON PIN FD.
	EXST. CONC. MON. FD.
	EXIST. PALM TREE
	EXIST. SMALL TREE
STAMP	PROP. SPI LOGO STAMP
XXX SF DRIVE	PROP. DRIVEWAY QUANTITY (CONCRETE OR ASPHALT)
*	SEE REMOVAL PLAN SHT. 5

PROPOSED QUANTITY ESTIMATE

DESCRIPTION	UNIT	QTY.
CURB & GUTTER	LF	700
DRIVEWAY RAMP (SIDEWALK)	EA	13
5' WIDE CONCRETE SIDEWALK	SY	194
ASPHALT DRIVEWAY	SY	00
CONCRETE DRIVEWAY	SY	224
STAMPED SPI LOGO	EA	06
CURB INLET (4'x6')	EA	02
24" RCP STORM (T&G)	LF	350

BENCHMARK NO. 2

"X" MARK AT TOP OF DRIVEWAY STA. 15+95, NORTH SIDE OF ROADWAY (ELEV. = 5.22)

811 Know what's below. Call before you dig.

REV.	DATE	DESCRIPTION

2025 SIDE STREET IMPROVEMENTS PHASE 1
(EAST GEORGIA RUTH DRIVE)

PLAN & PROFILE SHEET
(STA. 14+00 TO STA. 17+50)

South Padre ISLAND

PUBLIC WORKS
4601 PADRE BLVD.
SOUTH PADRE ISLAND
TEXAS 78597
(956) 761-8158

SCALE: 1"=30'
DRAWN BY: CAS/DWB
DATE: 08/29/2025
FILE: EAST GEORGIA RUTH

SHEET 7 OF 29

DISCLAIMER

QUANTITIES ARE ONLY ESTIMATES, CONTRACTOR TO VERIFY. ENGINEER TO BE NOTIFIED IMMEDIATELY OF ANY DISCREPANCIES.

ALL WET AND DRY UTILITY LOCATIONS ARE THE RESPONDSIBILTY OF THE CONTRACTOR.

CAUTION

CONTRACTOR TO MAINTAIN THE SEPERATION OF SAN: SEWER AND STORM SEWER PER TCEQ STANADRS. IMEDIATLY NOTIFY THE ENGINEER OF RECORD AND LMWD OF ANY DIRECT CONFLICTS.

GRAPHIC SCALE

0 15 30

(IN FEET)
1 inch = 30 ft.

LEGEND

	EXIST. CENTERLINE
	PROP. CENTERLINE
	PROP. LEFT GUTTER
	PROP. RIGHT GUTTER
	PROP. GRADE BREAK
	EXIST. SAN SEW. LINE
	EXIST. RIGHT OF WAY
	PROP.CONCRETE
R L R	PROP. DRIVEWAY RAMP L=LANDING/R=RAMP
S	EXIST. SAN, SEW. MANHOLE
	EXIST. IRON PIN FD.
	EXST. CONC. MON. FD.
	EXIST. PALM TREE
	EXIST. SMALL TREE
STAMP	PROP. SPI LOGO STAMP
XXX SF DRIVE	PROP. DRIVEWAY QUANTITY (CONCRETE OR ASPHALT)
*	SEE REMOVAL PLAN SHT. 5

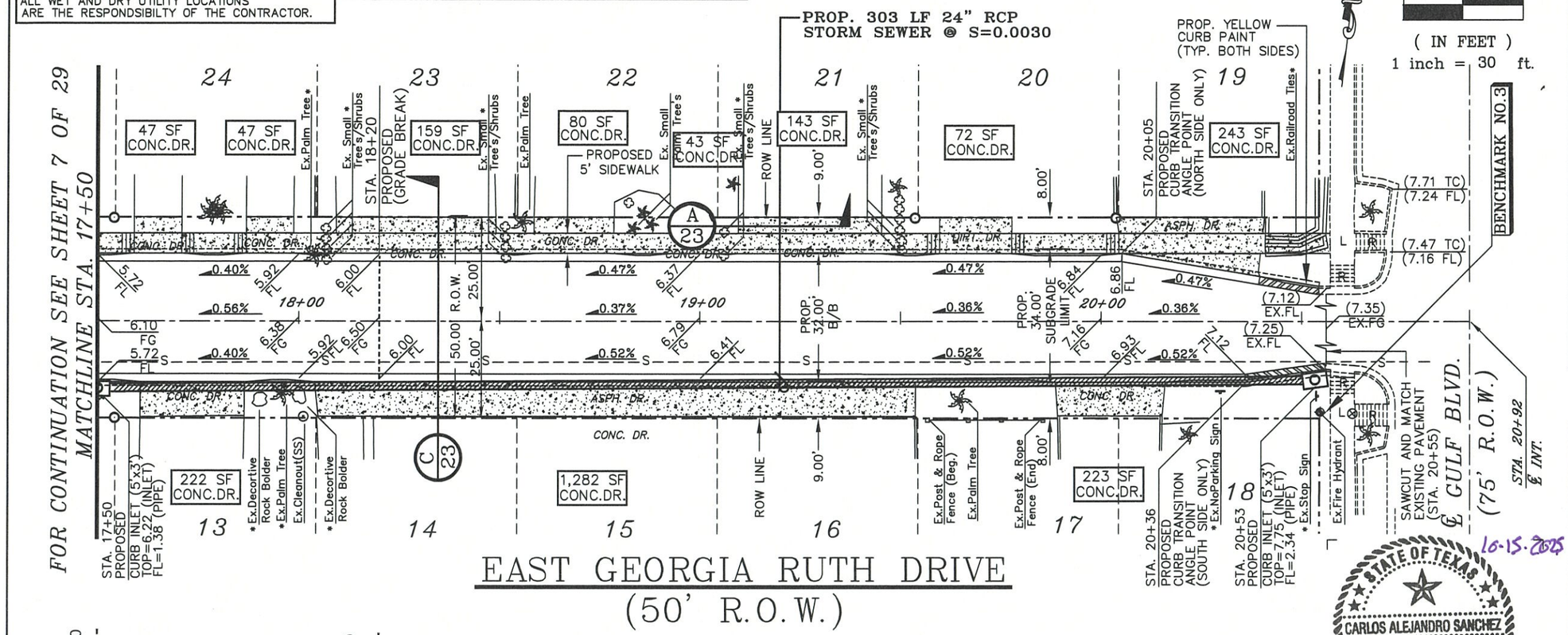

PROPOSED QUANTITY ESTIMATE

DESCRIPTION	UNIT	QTY.
CURB & GUTTER	LF	610
DRIVEWAY RAMP (SIDEWALK)	EA	06
5' WIDE CONCRETE SIDEWALK	SY	169
ASPHALT DRIVEWAY	SY	00
CONCRETE DRIVEWAY	SY	284
STAMPED SPI LOGO	EA	05
YELLOW CURB PAINT	LF	35
CURB INLET (5'x3')	EA	01
24" RCP STORM (T&G)	LF	303

BENCHMARK NO. 3

TOP OF NUT AT FIRE HYDRANT SE CORNER OF GULF BOULEVARD AND GEORGIA RUTH (ELEV. = 10.0)

STATE OF TEXAS
CARLOS ALEJANDRO SANCHEZ
93914
LICENSED
PROFESSIONAL ENGINEER
10-15-2025

811 Know what's below. Call before you dig.

REV.	DATE	DESCRIPTION

2025 SIDE STREET IMPROVEMENTS PHASE 1

(EAST GEORGIA RUTH DRIVE)

PLAN & PROFILE SHEET

(STA. 14+00 TO STA. 20+55)

South Padre ISLAND

PUBLIC WORKS

4601 PADRE BLVD,
SOUTH PADRE ISLAND
TEXAS 78597
(956) 761-8158

SCALE: 1"=30'
DRAWN BY: CAS/DWB
DATE: 08/29/2025
FILE: EAST GEORGIA RUTH

SHEET 8 OF 29

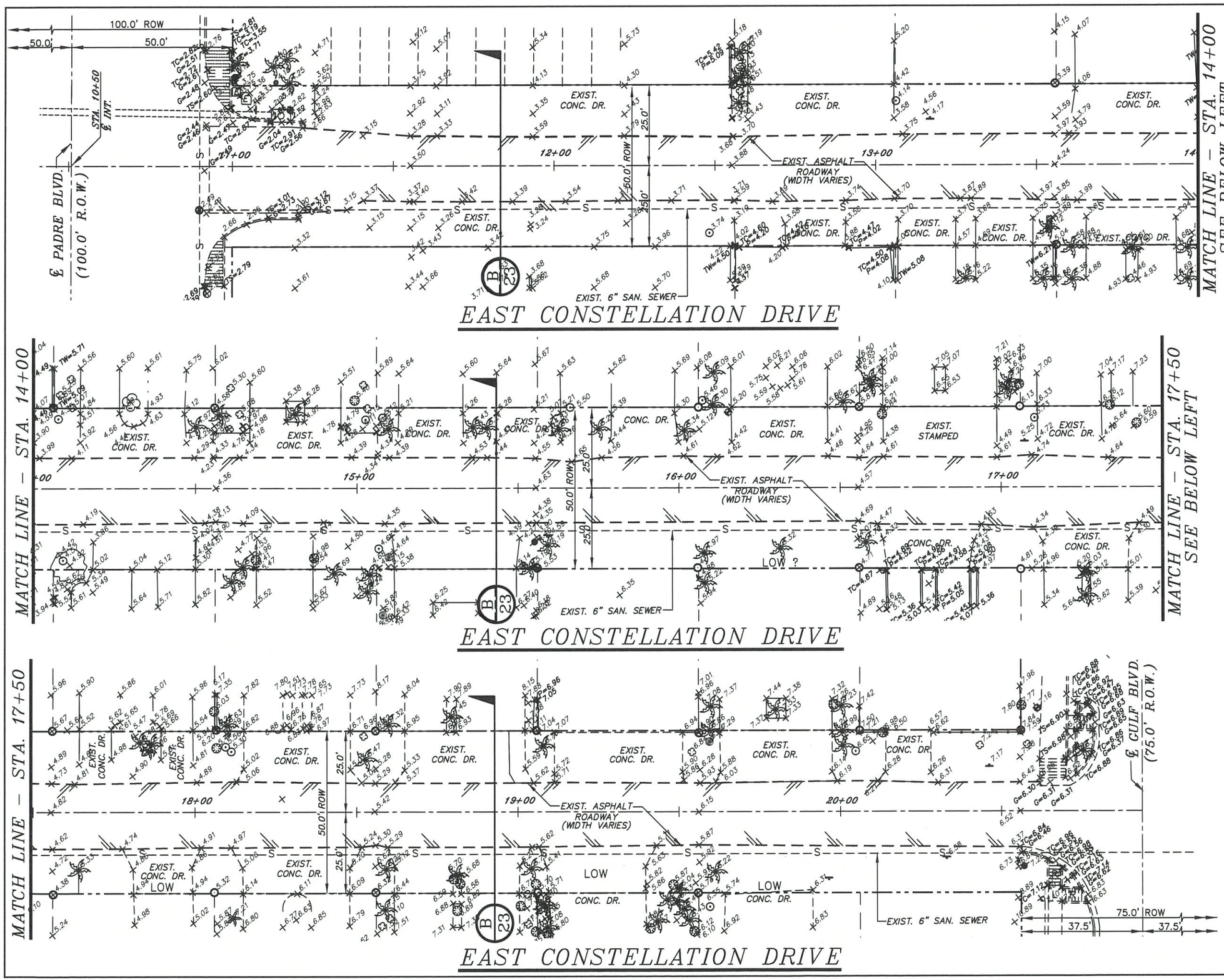

GRAPHIC SCALE

0 15 30

1 inch = 30 ft.

(IN FEET)

LEGEND	
	EXIST. CENTERLINE
	EXIST. CONCRETE
	EXIST. SAN SEW. LINE
	EXIST. ROW LINE
	EXIST. EDGE OF PAVEMENT
	EXIST. SAN. SEW. MANHOLE
	EXIST. IRON PIN FD.
	EXST. CONC. MON. FD.
	EXIST. PALM TREE
	EXIST. SMALL TREE
	EXISTING CENTERLINE
4.93	EXISTING ELEVATION

BASIS OF BEARINGS

BEARINGS OF LINE REFER TO GRID NORTH OF OF THE TEXAS COORINATE SYSTEM OF 1983 (SOUTH CENTRAL ZONE) AS COMPUTED FROM GPS VECTORS.

NGS DATA MONUMENTION

NATIONAL GEODETIC SURVEY (AB1247) NE CORNER OF PADRE BLVD. AND MARISOL DRIVE (ELEV. = 4.81)

10-15-2025

STATE OF TEXAS
CARLOS ALEJANDRO SANCHEZ
93914
LICENSED
PROFESSIONAL ENGINEER

2025 SIDE STREET IMPROVEMENTS PHASE 1
(EAST CONSTELLATION DRIVE)

TOPOGRAFIC SURVEY SHEET

South Padre ISLAND

PUBLIC WORKS

4601 PADRE BLVD.
SOUTH PADRE ISLAND
TEXAS 78597
(956) 761-8158

SCALE: 1"=30'	SHEET
DRAWN BY: CAS/DWB	10
DATE: 08/29/2025	OF 29
FILE: EAST CONSTELLATION	

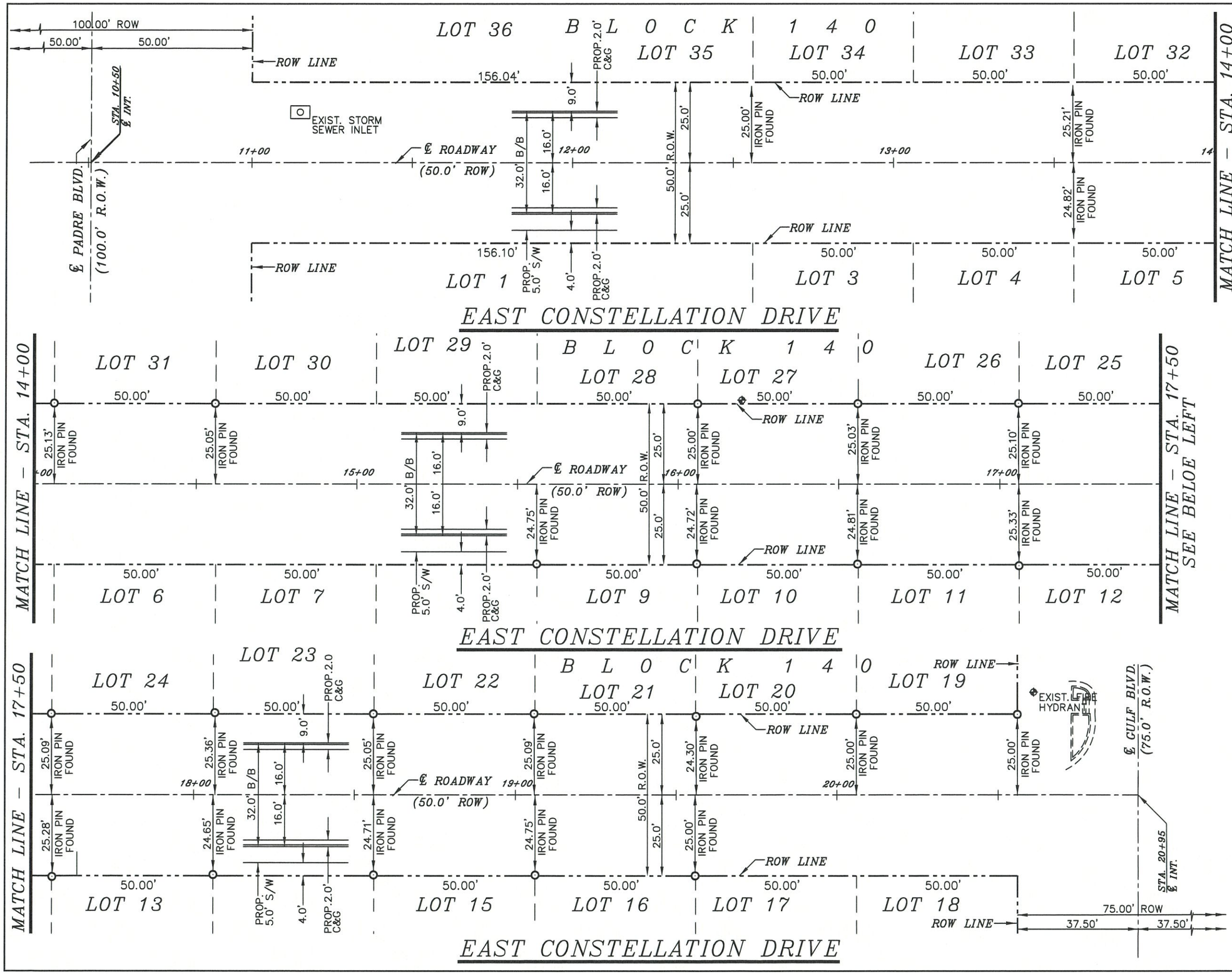

GRAPHIC SCALE

0 15 30

(IN FEET)

1 inch = 30 ft.

LEGEND	
—·—	EXIST. CENTERLINE
— - —	EXIST. ROW LINE
○	EXIST. IRON PIN FD.
○	EXST. CONC. MON. FD.
℄	EXISTING CENTERLINE

BASIS OF BEARINGS

BEARINGS OF LINE REFER TO GRID NORTH OF OF THE TEXAS COORINATE SYSTEM OF 1983 (SOUTH CENTRAL ZONE) AS COMPUTED FROM GPS VECTORS.

NGS DATA MONUMENTION

NATIONAL GEODETIC SURVEY (AB1247) NE CORNER OF PADRE BLVD. AND MARISOL DRIVE (ELEV. = 4.81)

10-15-2025

STATE OF TEXAS
CARLOS ALEJANDRO SANCHEZ
93914
LICENSED
PROFESSIONAL ENGINEER

REV.	DATE

2025 SIDE STREET IMPROVEMENTS PHASE 1
(EAST CONSTELLATION DRIVE)

HORIZONTAL CONTROL PLAN

South Padre ISLAND

PUBLIC WORKS

4601 PADRE BLVD.
SOUTH PADRE ISLAND
TEXAS 78597
(956) 761-8158

SCALE: 1"=40'	SHEET
DRAWN BY: CAS/DWB	11
DATE: 08/29/2025	OF 29
FILE: EAST CONSTELLATION	

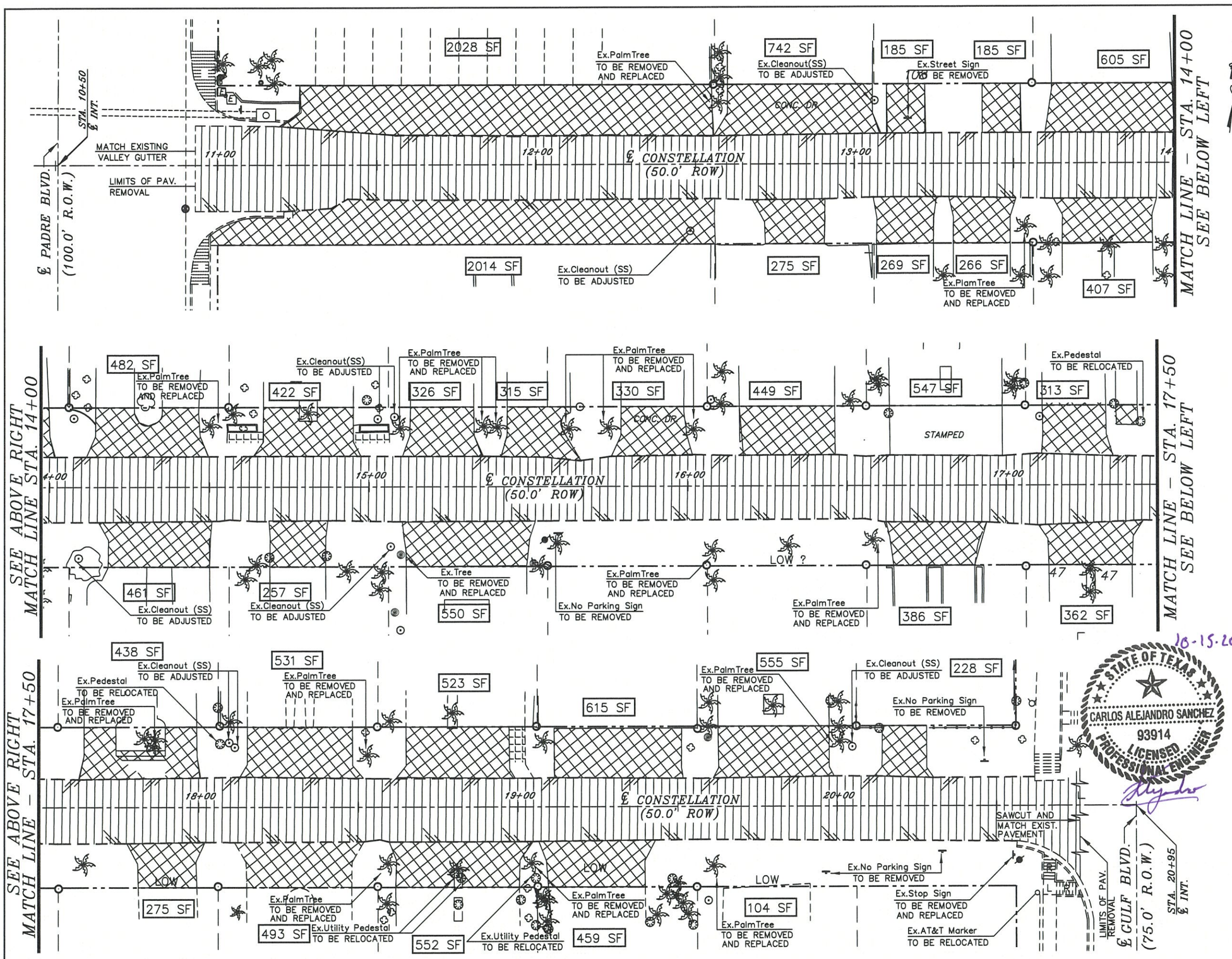

GRAPHIC SCALE

0 15 30

(IN FEET)

1 inch = 30 ft.

LEGEND	
	REMOVE EXISTING CONCRETE DRIVEWAY (APPROACH)
	REMOVE EXISTING ASPHALT DRIVEWAY (APPROACH)
	REMOVE EXISTING DRIVEWAY PAVERS (APPROACH)
	REMOVE EXISTING ROADWAY PAVEMENT OR REUSE AS BASE SALAVAGED MATERIAL
XXX SF	EXISTING DRIVEWAY SQUARE FOOTAGE TO BE REMOVED

EXISTING QUANTITY ESTIMATE	
09 EA.	ADJUST EXISTING CLEANOUT (San.Sew,)
01 EA.	ADJUST EXISTING MANHOLE (San.Sew,)
04 EA.	RELOCATE EXISTING UTILITY PEDESTAL
05 EA.	REMOVE EXISTING STREET SIGN
01 EA.	REMOVE EXISTING TREE
23 EA.	REMOVE AND REPLACE EXISTING PALM TREE
1,827 SY	REMOVE EXISTING CONCRETE DRIVEWAYS
30 SY	REMOVE EXISTING DRIVEWAY PAVERS
2,305 SY	REMOVE EXISTING ROADWAY PAVEMENT OR REUSE AS BASE MATERIAL

10-15-2025

STATE OF TEXAS
CARLOS ALEJANDRO SANCHEZ
93914
LICENSED
PROFESSIONAL ENGINEER

REV.	DATE	DESCRIPTION

2025 SIDE STREET IMPROVEMENTS PHASE 1

(EAST CONSTELLATION DRIVE)

REMOVE/REPLACE/RELOCATE AND ADJUST PLAN

South Padre ISLAND

PUBLIC WORKS

4601 PADRE BLVD,
SOUTH PADRE ISLAND
TEXAS 78597
(956) 761-8158

SCALE: 1"=30'
DRAWN BY: CAS/DWB
DATE: 08/29/2025
FILE: EAST CONSTELLATION

SHEET 12 OF 29

DISCLAIMER

QUANTITIES ARE ONLY ESTIMATES, CONTRACTOR TO VERIFY. ENGINEER TO BE NOTIFIED IMMEDIATELY OF ANY DISCREPANCIES.

ALL WET AND DRY UTILITY LOCATIONS ARE THE RESPONSIBILTY OF THE CONTRACTOR.

CAUTION

CONTRACTOR TO MAINTAIN THE SEPERATION OF SAN. SEWER AND STORM SEWER PER TCEQ STANADRS. IMEDIATLY NOTIFY THE ENGINEER OF RECORD AND LMWD OF ANY DIRECT CONFLICTS.

GRAPHIC SCALE

0 15 30

(IN FEET)
1 inch = 30 ft.

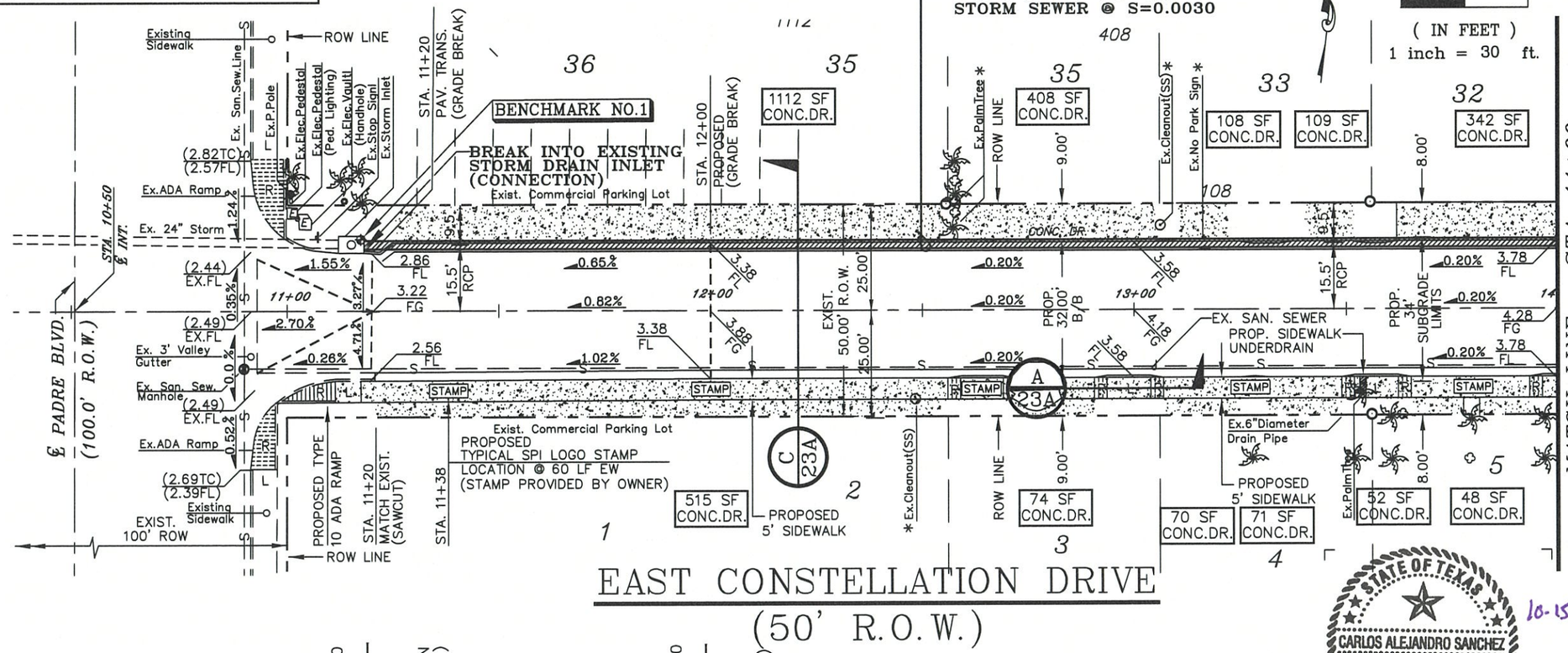

EAST CONSTELLATION DRIVE
(50' R.O.W.)

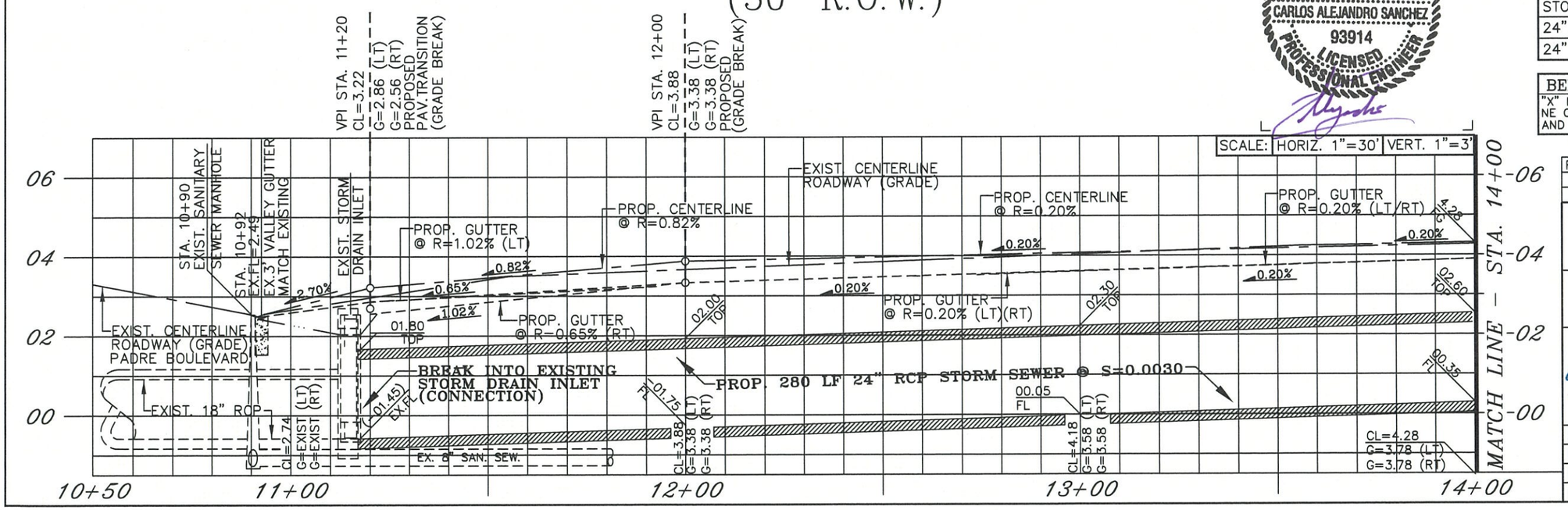

LEGEND	
	EXIST. CENTERLINE
	PROP. CENTERLINE
	PROP. LEFT GUTTER
	PROP. RIGHT GUTTER
	PROP. GRADE BREAK
	EXIST. SAN SEW. LINE
	EXIST. RIGHT OF WAY
	PROP.CONCRETE
R L R	PROP. DRIVEWAY RAMP L=LANDING/R=RAMP
Ⓢ	EXIST. SAN, SEW. MANHOLE
○	EXIST. IRON PIN FD.
○	EXST. CONC. MON. FD.
	EXIST. PALM TREE
	EXIST. SMALL TREE
STAMP	PROP. SPI LOGO STAMP
XXX SF DRIVE	PROP. DRIVEWAY QUANTITY (CONCRETE OR ASPHALT)
*	SEE REMOVAL PLAN SHT. 12

PROPOSED QUANTITY ESTIMATE

DESCRIPTION	UNIT	QTY.
CURB & GUTTER	LF	560
DRIVEWAY RAMP (SIDEWALK)	EA	07
TYPE 10 ADA RAMP	EA	01
5' WIDE CONCRETE SIDEWALK	SY	158
ASPHALT DRIVEWAY	SY	00
CONCRETE DRIVEWAY	SY	323
STAMPED SPI LOGO	EA	05
STORM DRAIN CONNECTION	EA	01
24" RCP STORM (T&G)	LF	280
24" SIDEWALK UNDERDRAIN	EA	01

STATE OF TEXAS
CARLOS ALEJANDRO SANCHEZ
93914
LICENSED PROFESSIONAL ENGINEER
10-15-2025

BENCHMARK NO. 1
"X" MARK AT TOP OF INLET
NE CORNER OF PADRE BOULEVARD AND CONSTELLATION (ELEV. = 2.80)

811 Know what's below. Call before you dig.

REV.	DATE	DESCRIPTION

2025 SIDE STREET IMPROVEMENTS PHASE 1
(EAST CONSTELLATION DRIVE)

PLAN & PROFILE SHEET
(STA. 10+50 TO STA. 14+00)

South Padre ISLAND
PUBLIC WORKS
4601 PADRE BLVD.
SOUTH PADRE ISLAND
TEXAS 78597
(956) 761-8158

SCALE: 1"=30'
DRAWN BY: CAS/DWB
DATE: 08/29/2025
FILE: EAST CONSTELLATION

DISCLAIMER

QUANTITIES ARE ONLY ESTIMATES, CONTRACTOR TO VERIFY. ENGINEER TO BE NOTIFIED IMMEDIATELY OF ANY DISCREPANCIES.

ALL WET AND DRY UTILITY LOCATIONS ARE THE RESPONDSIBILTY OF THE CONTRACTOR.

CAUTION

CONTRACTOR TO MAINTAIN THE SEPERATION OF SAN. SEWER AND STORM SEWER PER TCEQ STANADRS. IMEDIATLY NOTIFY THE ENGINEER OF RECORD AND LMWD OF ANY DIRECT CONFLICTS.

GRAPHIC SCALE

0 15 30

(IN FEET)

1 inch = 30 ft.

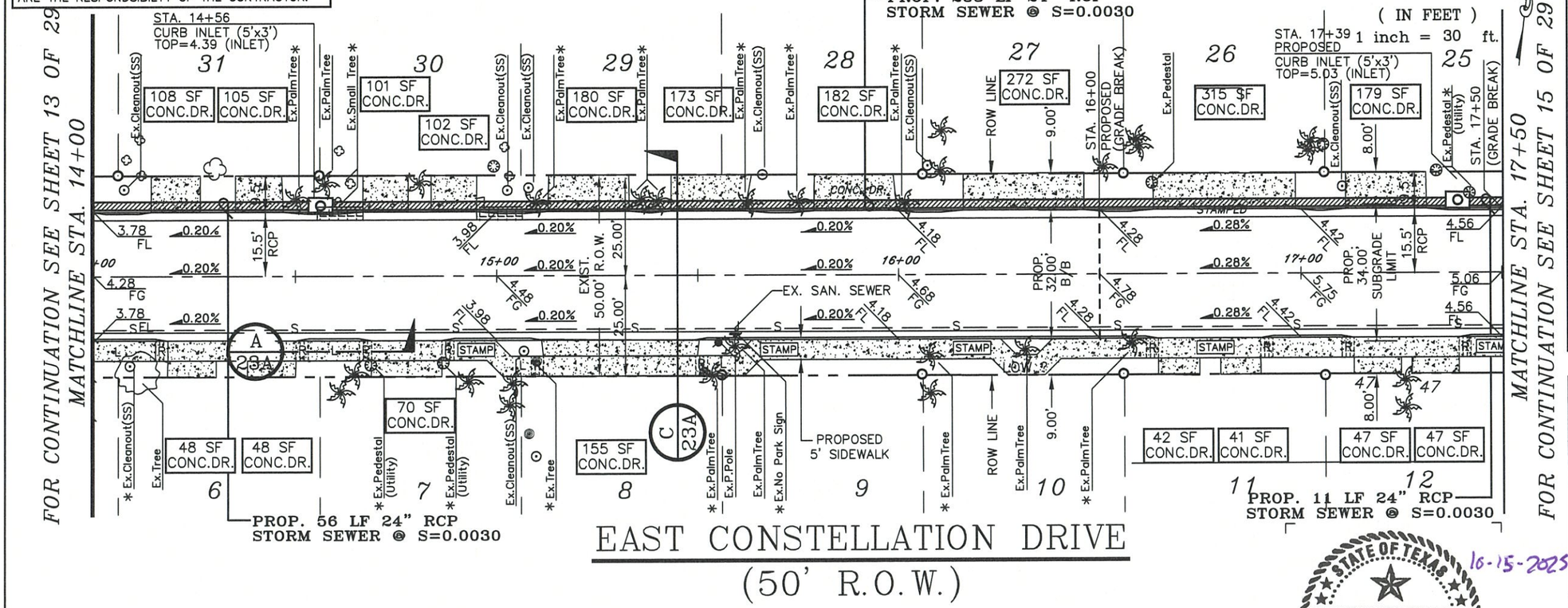

EAST CONSTELLATION DRIVE

(50' R.O.W.)

LEGEND

	EXIST. CENTERLINE
	PROP. CENTERLINE
	PROP. LEFT GUTTER
	PROP. RIGHT GUTTER
	PROP. GRADE BREAK
	EXIST. SAN SEW. LINE
	EXIST. RIGHT OF WAY
	PROP.CONCRETE
R L R	PROP. DRIVEWAY RAMP L=LANDING/R=RAMP
S	EXIST. SAN, SEW. MANHOLE
	EXIST. IRON PIN FD.
	EXST. CONC. MON. FD.
	EXIST. PALM TREE
	EXIST. SMALL TREE
STAMP	PROP. SPI LOGO STAMP
XXX SF DRIVE	PROP. DRIVEWAY QUANTITY (CONCRETE OR ASPHALT)
*	SEE REMOVAL PLAN SHT. 12

PROPOSED QUANTITY ESTIMATE

DESCRIPTION	UNIT	QTY.
CURB & GUTTER	LF	700
DRIVEWAY RAMP (SIDEWALK)	EA	10
5' WIDE CONCRETE SIDEWALK	SY	194
ASPHALT DRIVEWAY	SY	00
CONCRETE DRIVEWAY	SY	226
STAMPED SPI LOGO	EA	05
CURB INLET (5'x3')	EA	2
24" RCP STORM (T&G)	LF	350

BENCHMARK NO. 2

"X" MARK AT CONCRETE DRIVEWAY STA. 16+17, NORTH SIDE OF ROADWAY (ELEV. = 5.14)

STATE OF TEXAS
CARLOS ALEJANDRO SANCHEZ
93914
LICENSED
PROFESSIONAL ENGINEER
10-15-2025

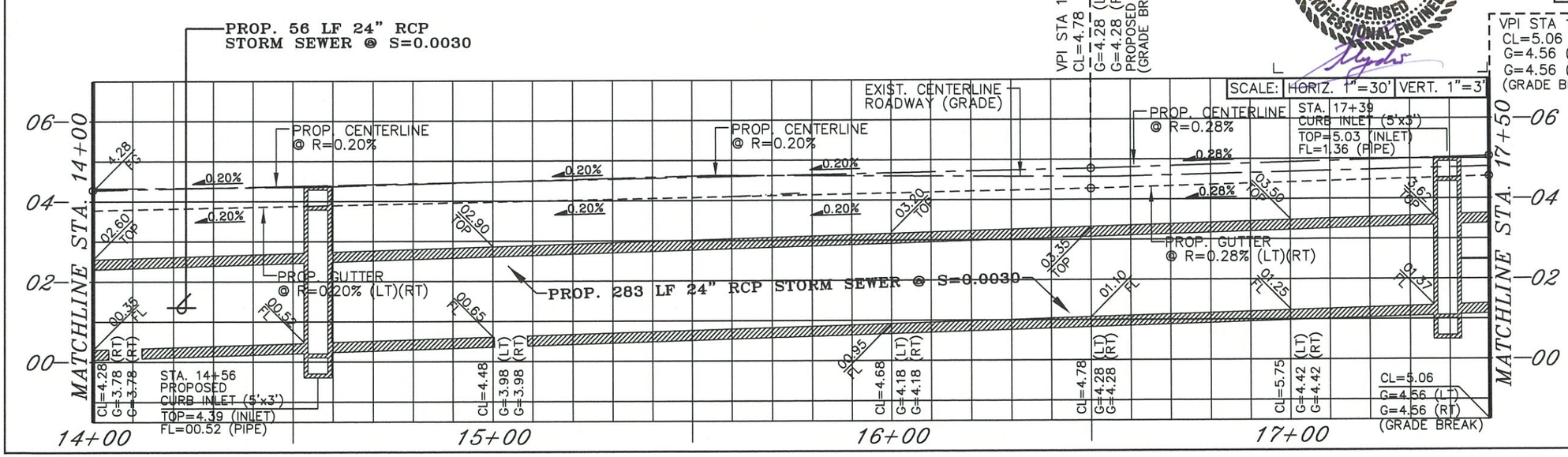

SCALE: HORIZ. 1"=30' VERT. 1"=3'

REV.	DATE	DESCRIPTION

2025 SIDE STREET IMPROVEMENTS PHASE 1

(EAST CONSTELLATION DRIVE)

PLAN & PROFILE SHEET

(STA. 14+00 TO STA. 17+50)

PUBLIC WORKS

4601 PADRE BLVD,
SOUTH PADRE ISLAND
TEXAS 78597
(956) 761-8158

SCALE: 1"=30'
DRAWN BY: CAS/DWB
DATE: 08/29/2025
FILE: EAST CONSTELLATION

SHEET 14 OF 29

811 Know what's below. Call before you dig.

DISCLAIMER

QUANTITIES ARE ONLY ESTIMATES, CONTRACTOR TO VERIFY. ENGINEER TO BE NOTIFIED IMMEDIATELY OF ANY DISCREPANCIES.

ALL WET AND DRY UTILITY LOCATIONS ARE THE RESPONDSIBILTY OF THE CONTRACTOR.

CAUTION

CONTRACTOR TO MAINTAIN THE SEPERATION OF SAN. SEWER AND STORM SEWER PER TCEQ STANADRS. IMEDIATLY NOTIFY THE ENGINEER OF RECORD AND LMWD OF ANY DIRECT CONFLICTS.

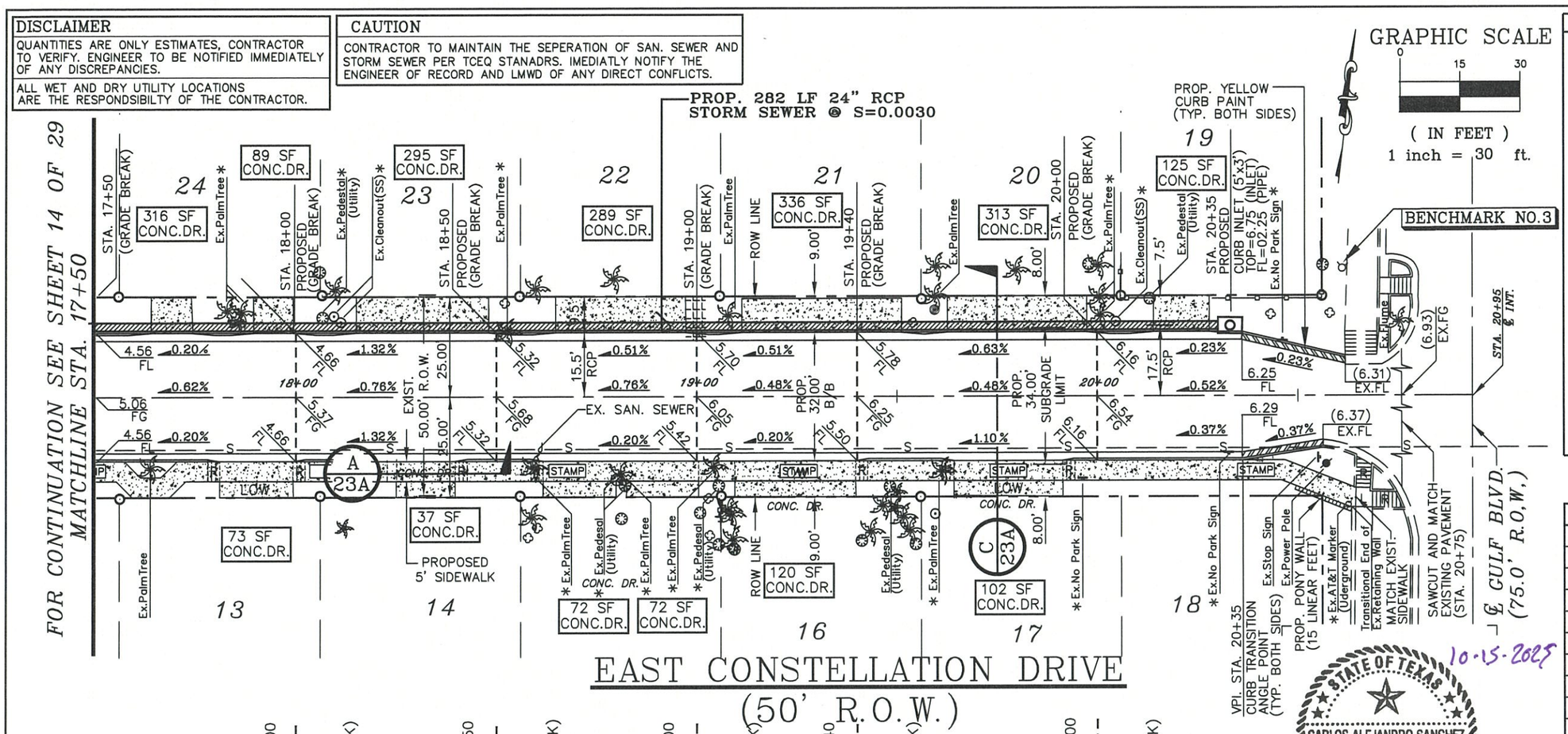

LEGEND	
	EXIST. CENTERLINE
	PROP. CENTERLINE
	PROP. LEFT GUTTER
	PROP. RIGHT GUTTER
	PROP. GRADE BREAK
	EXIST. SAN SEW. LINE
	EXIST. RIGHT OF WAY
	PROP.CONCRETE
R L R	PROP. DRIVEWAY RAMP L=LANDING/R=RAMP
S	EXIST. SAN, SEW. MANHOLE
	EXIST. IRON PIN FD.
	EXST. CONC. MON. FD.
	EXIST. PALM TREE
	EXIST. SMALL TREE
STAMP	PROP. SPI LOGO STAMP
XXX SF DRIVE	PROP. DRIVEWAY QUANTITY (CONCRETE OR ASPHALT)
*	SEE REMOVAL PLAN SHT. 12

PROPOSED QUANTITY ESTIMATE

DESCRIPTION	UNIT	QTY.
"L" CURB & GUTTER	LF	615
DRIVEWAY RAMP (SIDEWALK)	EA	08
5' WIDE CONCRETE SIDEWALK	SY	175
ASPHALT DRIVEWAY	SY	00
CONCRETE DRIVEWAY	SY	249
STAMPED SPI LOGO	EA	05
YELLOW CURB PAINT	LF	45
PONY WALL	LF	15
CURB INLET (5'x3')	EA	01
24" RCP STORM (T&G)	LF	285

BENCHMARK NO. 3

TOP OF NUT AT FIRE HYDRANT NW CORNER OF GULF BOULEVARD AND CONSTELLATION (ELEV. = 9.36)

STATE OF TEXAS
CARLOS ALEJANDRO SANCHEZ
93914
LICENSED PROFESSIONAL ENGINEER
10-15-2025

811 Know what's below. Call before you dig.

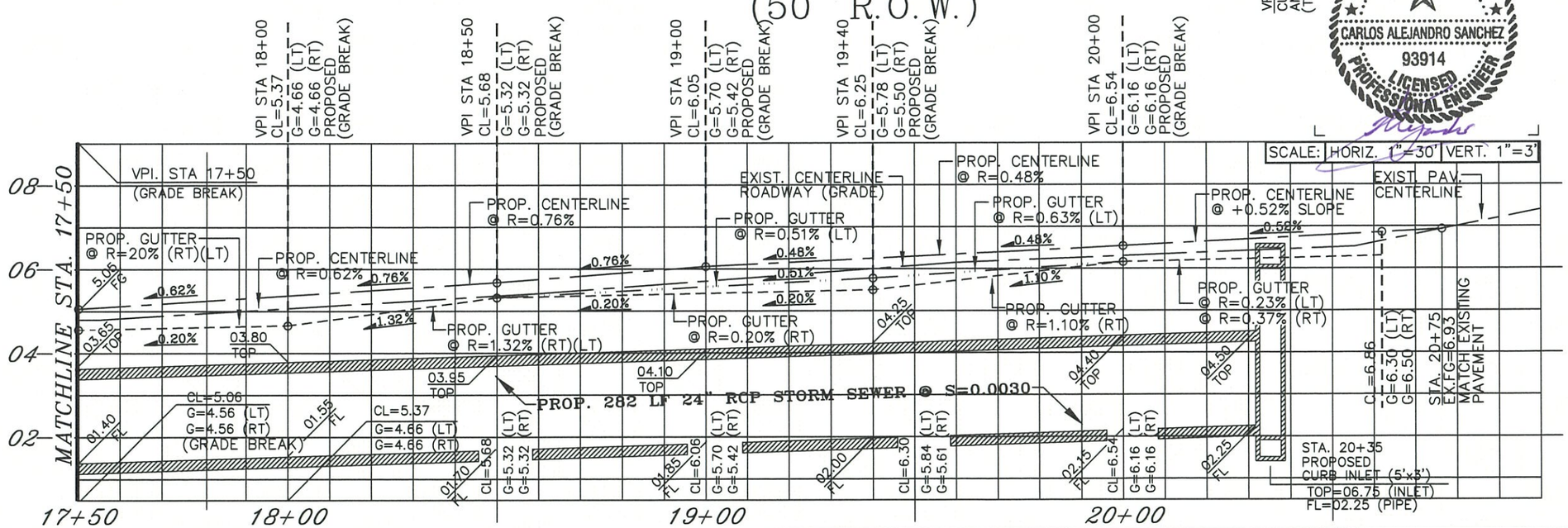

REV.	DATE	DESCRIPTION

2025 SIDE STREET IMPROVEMENTS PHASE 1
(EAST CONSTELLATION DRIVE)

PLAN & PROFILE SHEET
(STA. 17+50 TO STA. 20+75)

South Padre ISLAND

PUBLIC WORKS
4601 PADRE BLVD,
SOUTH PADRE ISLAND
TEXAS 78597
(956) 761-8158

SCALE: 1"=30'
DRAWN BY: CAS/DWB
DATE: 08/29/2025
FILE: EAST CONSTELLATION

2025 SIDE STREET IMPROVEMENTS, PHASE 1

WEST GARDENIA DRIVE

PROJECT LOCATION
GARDENIA DRIVE

(NO SCALE)

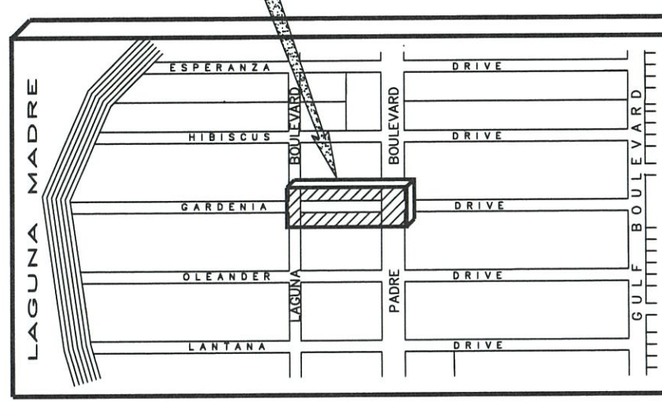

LOCATION MAP
(NO SCALE)

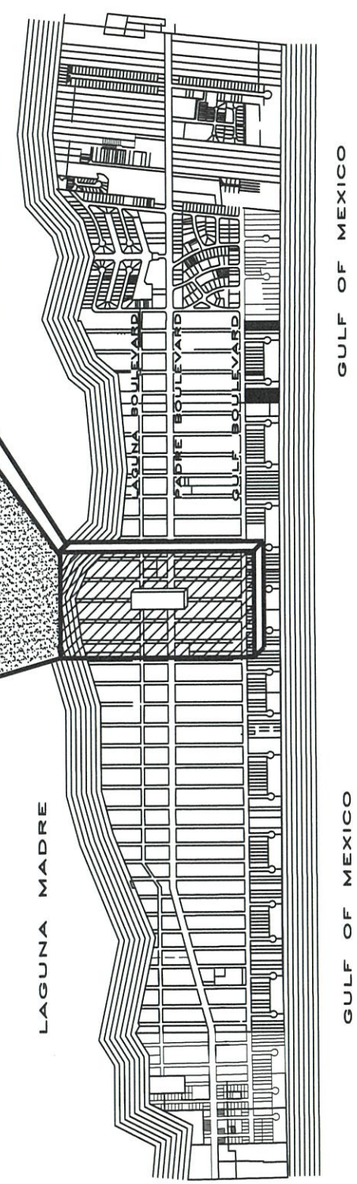

VICINITY MAP
(NO SCALE)

SOUTH PADRE ISLAND CITY COUNCIL

PATRICK McNULTY _ _ _ _ _ _ _ MAYOR
REES LANGSTON _ _ _ MAYOR-PRO TEM
JOE RICCO _ _ _ _ _ _ _ _ _ _ MEMBER
KEN MEDDERS, JR. _ _ _ _ _ _ MEMBER
KERRY SCHWARTZ _ _ _ _ _ _ MEMBER
LISA GRAVES _ _ _ _ _ _ _ _ MEMBER

LOCAL UTILITY PROVIDER'S

LAGUNA MADRE WATER DISTRICT (LMWD)
DISTRICT OFFICE (PORT ISABEL, TX)
PHONE : (956-943-2626)

AMERICAN ELECTRIC POWER (AEP)
DISTRICT OFFICE (LOS FRESNOS, TX)
PHONE : (877-373-4858)

AMERICAN TELEPHONE & TELEGRAHIC CO. (AT&T)
COMPANY PARTNERSHIP
PHONE : (800-321-2000)

CHARTER COMMUNICATIONS LLC (SPECTRUM)
LIMITED LIABILITY COMPANY PARTNERSHIP
PHONE : (855-707-7328)

VICINITY/LOCATION MAP

ON

SOUTH PADRE ISLAND,
CAMERON COUNTY, TEXAS
(78597-8079)

BENCHMARK NO. 1	BENCHMARK NO. 2
TOP OF NUT AT FIRE HYDRANT SW CORNER OF LAGUNA BLVD. AND GARDINA DRIVE (ELEV. = 7.30)	TOP OF SANITARY SEWER MANHOLE SW CORNER OF PADRE BOULEVARD AND GARDINA DRIVE (ELEV. = 2.42)

SHEET INDEX

DESCRIPTION	SHEET NO.
TITLE SHEET (EAST GEORGIA RUTH DRIVE)	1
GENERAL NOTE SHEET AND ABBREVIATIONS	2
TOPOGRAFIC SURVEY SHEET	3
HORIZONTAL CONTROL PLAN	4
REMOVE/RELOCATE/REPLACE AND ADJUST PLAN	5
PLAN & PROFILE SHEET (STA. 10+50 THRU STA. 14+00)	6
PLAN & PROFILE SHEET (STA. 14+00 THRU STA. 17+50)	7
PLAN & PROFILE SHEET (STA. 17+50 THRU STA. 20+55)	8
TITLE SHEET (EAST CONSTELLATION DRIVE)	9
TOPOGRAFIC SURVEY SHEET	10
HORIZONTAL CONTROL PLAN	11
REMOVE/RELOCATE/REPLACE AND ADJUST PLAN	12
PLAN & PROFILE SHEET (STA. 10+50 THRU STA. 14+00)	13
PLAN & PROFILE SHEET (STA. 14+00 THRU STA. 17+50)	14
PLAN & PROFILE SHEET (STA. 17+50 THRU STA. 20+75)	15
TITLE SHEET (WEST GARDENIA DRIVE)	16
TOPOGRAFIC SURVEY SHEET	17
HORIZONTAL CONTROL PLAN	18
REMOVE/RELOCATE/REPLACE AND ADJUST PLAN	19
PLAN & PROFILE SHEET (STA. 10+70 THRU STA. 14+00)	20
PLAN & PROFILE SHEET (STA. 14+00 THRU STA. 14+30)	21
PAVEMENT AND CURB DETAILS	22
TYPICAL STREET SECTION AND SIDEWALK RAMP (GEORGIA RUTH)	23
TYPICAL STREET SECTION AND SIDEWALK RAMP (CONSTELLATION)	23A
TYPICAL STREET SECTION AND SIDEWALK RAMP (GARDENIA)	23B
SITE DETAIL SHEET	24
DRAINAGE DETAIL SHEET	25
TRAFFIC CONTROL PLAN	26
BARRICADE AND CONSTRUCTION GENERAL NOTE SHEET	27
SWP3 DETAILS	28
ADA RAMP DETAIL SHEET	29

BASIS OF BEARINGS	NGS DATA MONUMENTION
BEARINGS OF LINE REFER TO GRID NORTH OF OF THE TEXAS COORINATE SYSTEM OF 1983 (SOUTH CENTRAL ZONE) AS COMPUTED FROM GPS VECTORS.	NATIONAL GEODETIC SURVEY (AB1247) NE CORNER OF PADRE BLVD. AND MARISOL DRIVE (ELEV. = 4.81)

10-15-2025

STATE OF TEXAS
CARLOS ALEJANDRO SANCHEZ
93914
LICENSED
PROFESSIONAL ENGINEER

811 Know what's below. Call before you dig.

REV.	DATE	DESCRIPTION

2025 SIDE STREET IMPROVEMENTS PHASE 1
(WEST GARDENIA DRIVE)

TITLE SHEET

South Padre ISLAND

PUBLIC WORKS
4601 PADRE BLVD,
SOUTH PADRE ISLAND
TEXAS 78597
(956) 761-8158

SCALE: NONE
DRAWN BY: CAS/DWB
DATE: 08/29/2025
FILE: WEST GARDENIA

SHEET 16 OF 29

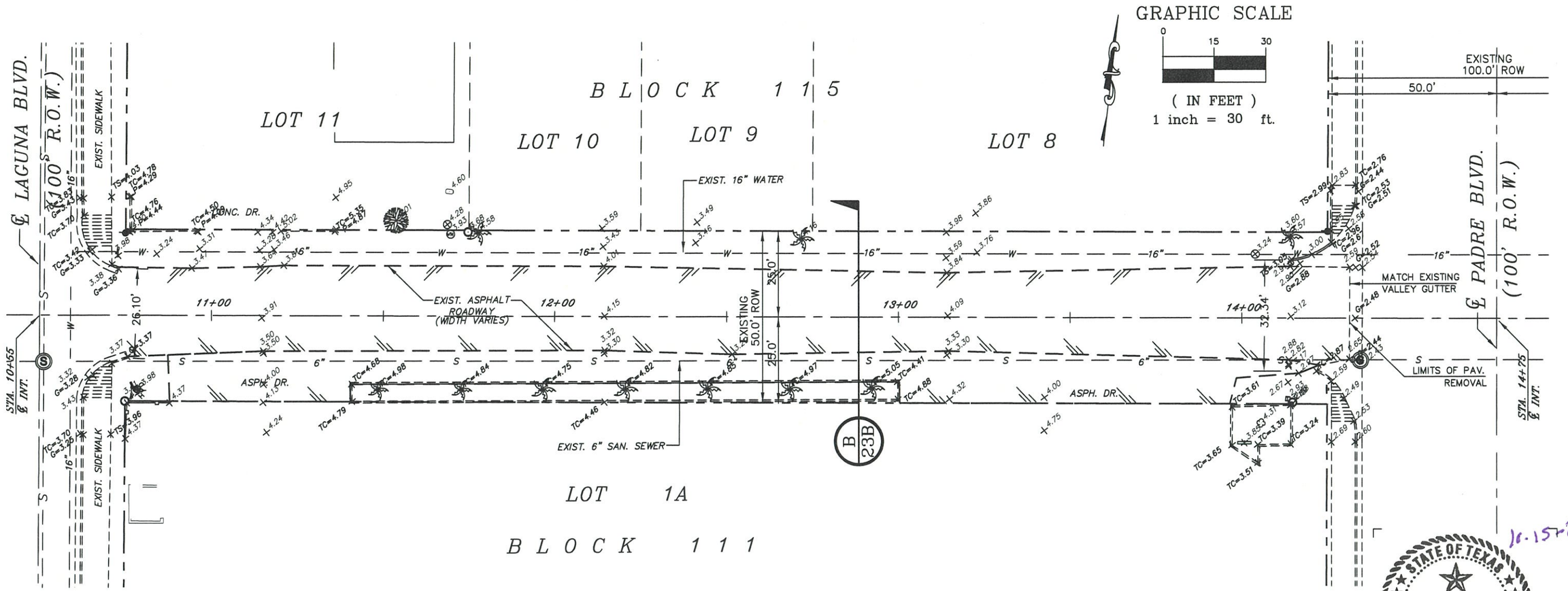

WEST GARDENIA DRIVE
(50' R.O.W.)

10-15-2025

STATE OF TEXAS
CARLOS ALEJANDRO SANCHEZ
93914
LICENSED
PROFESSIONAL ENGINEER

BASIS OF BEARINGS

BEARINGS OF LINE REFER TO GRID NORTH OF OF THE TEXAS COORINATE SYSTEM OF 1983 (SOUTH CENTRAL ZONE) AS COMPUTED FROM GPS VECTORS.

NGS DATA MONUMENTATION

NATIONAL GEODETIC SURVEY (AB1247) NE CORNER OF PADRE BLVD. AND MARISOL DRIVE (ELEV. = 4.81)

LEGEND

— – —	EXIST. CENTERLINE
	EXIST. CONCRETE
--S--S--	EXIST. SAN SEW. LINE
— – – —	EXIST. ROW LINE
	EXIST. EDGE OF PAVEMENT
Ⓢ	EXIST. SAN. SEW. MANHOLE
○	EXIST. IRON PIN FD.
○	EXST. CONC. MON. FD.
	EXIST. PALM TREE
	EXIST. SMALL TREE
℄	EXISTING CENTERLINE
+4.98	EXISTING ELEVATION

REV.	DATE	DESCRIPTION

2025 SIDE STREET IMPROVEMENTS PHASE 1
(WEST GARDENIA DRIVE)

TOPOGRAFIC SURVEY SHEET

South Padre ISLAND

PUBLIC WORKS

4601 PADRE BLVD,
SOUTH PADRE ISLAND
TEXAS 78597
(956) 761-8158

SCALE: 1"=30'
DRAWN BY: CAS/DWB
DATE: 08/29/2025
FILE: WEST GARDINA

SHEET 17 OF 29

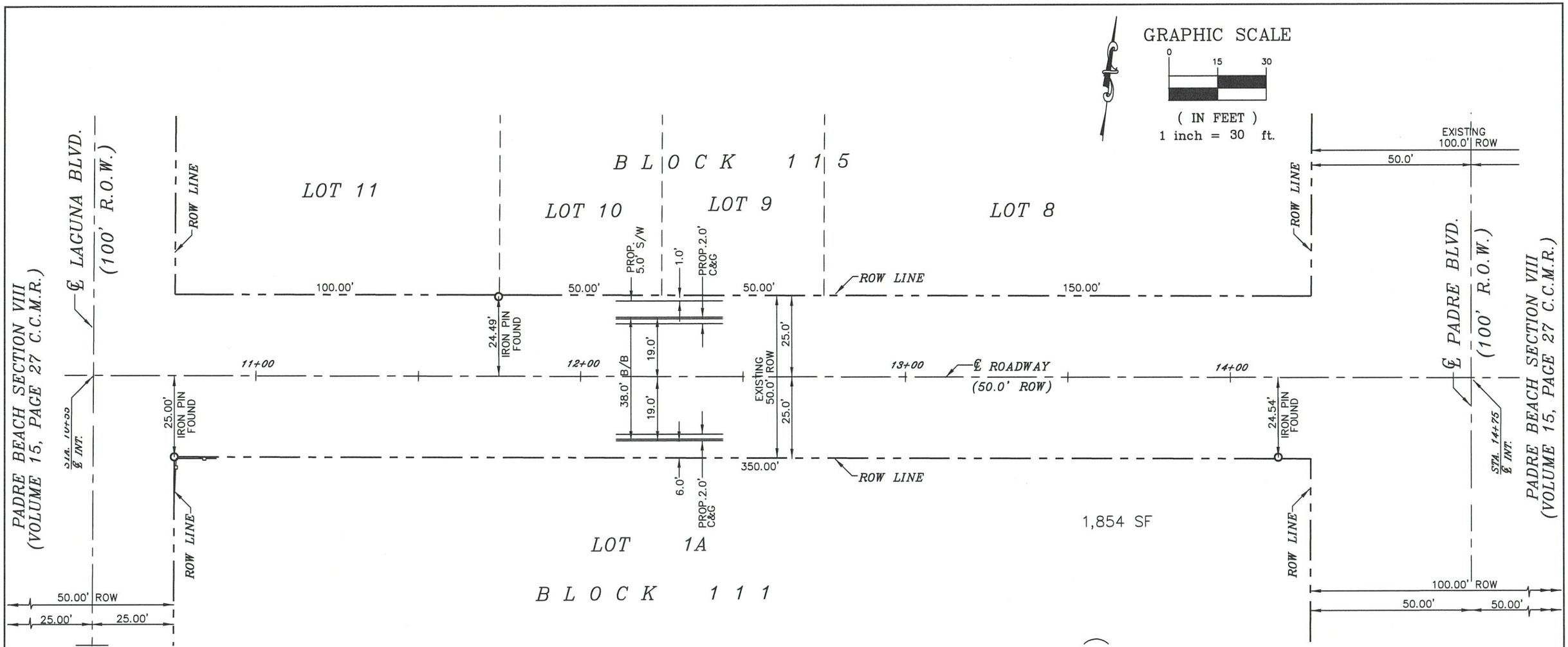

LEGEND AND ABBREVIATIONS	
———	EXIST. CENTERLINE
— - - —	EXIST. ROW LINE
o	EXIST. IRON PIN FD.
o	EXST. CONC. MON. FD.
EXIST.	EXISTING
ROW	RIGHT OF WAY
STA.	STATION
INT	INTERSECTION
℄	CENTERLINE
BLVD	BOULEVARTD
B/B	BACK TO BACK (C&G)
C&G	CURB AND GUTTER
S/W	SIDEWALK
PROP.	PROPOSED
TYP.	TYPICAL

BASIS OF BEARINGS

BEARINGS OF LINE REFER TO GRID NORTH OF OF THE TEXAS COORINATE SYSTEM OF 1983 (SOUTH CENTRAL ZONE) AS COMPUTED FROM GPS VECTORS.

NGS DATA MONUMENTATION

NATIONAL GEODETIC SURVEY (AB1247) NE CORNER OF PADRE BLVD. AND MARISOL DRIVE (ELEV. = 4.81)

10-15-2025

STATE OF TEXAS
CARLOS ALEJANDRO SANCHEZ
93914
LICENSED
PROFESSIONAL ENGINEER

REV.	DATE

2025 SIDE STREET IMPROVEMENTS PHASE 1
(WEST GARDENIA DRIVE)

HORIZONTAL CONTROL PLAN

South Padre ISLAND

PUBLIC WORKS

4601 PADRE BLVD,
SOUTH PADRE ISLAND
TEXAS 78597
(956) 761-8158

SCALE: 1"=40'	SHEET
DRAWN BY: CAS/DWB	18
DATE: 08/29/2025	OF 29
FILE: WEST GARDINA	

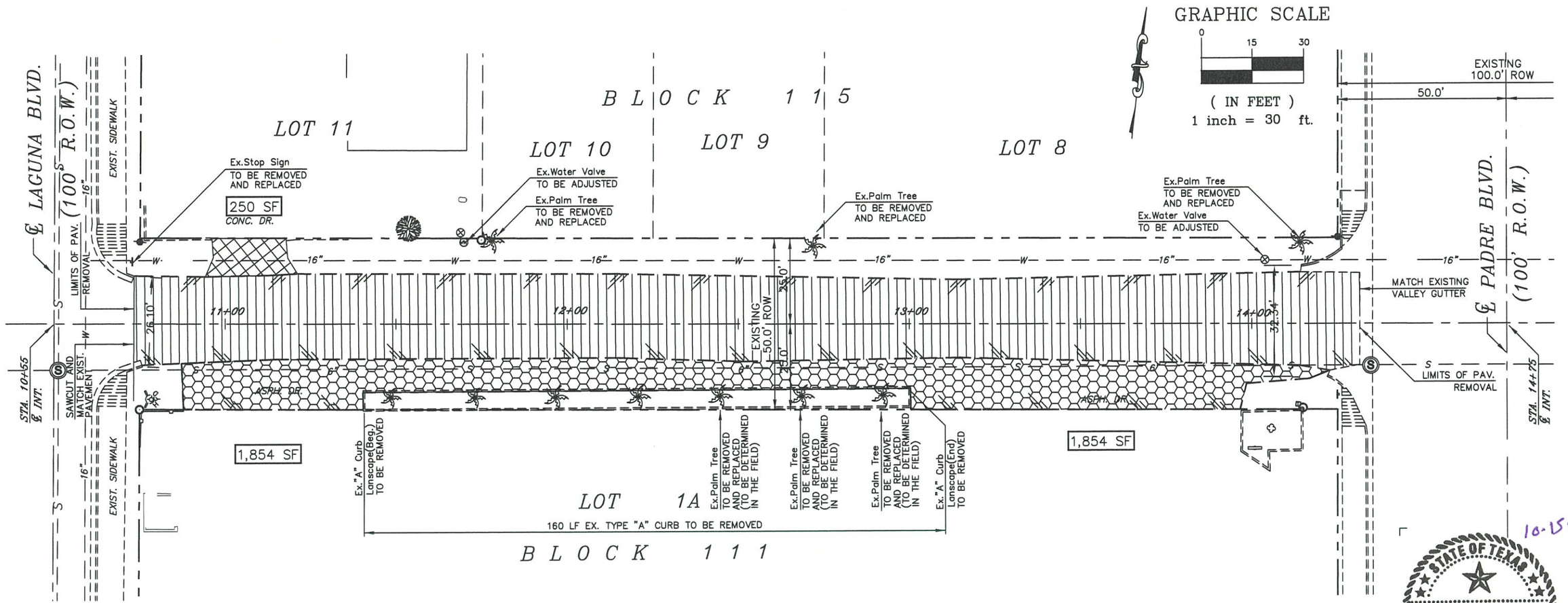

WEST GARDENIA DRIVE
(50' R.O.W.)

10-15-2025

STATE OF TEXAS
CARLOS ALEJANDRO SANCHEZ
93914
LICENSED
PROFESSIONAL ENGINEER

BASIS OF BEARINGS
BEARINGS OF LINE REFER TO GRID NORTH OF OF THE TEXAS COORINATE SYSTEM OF 1983 (SOUTH CENTRAL ZONE) AS COMPUTED FROM GPS VECTORS.

NGS DATA MONUMENTATION
NATIONAL GEODETIC SURVEY (AB1247) NE CORNER OF PADRE BLVD. AND MARISOL DRIVE (ELEV. = 4.81)

BENCHMARK NO. 1
TOP O NUT AT FIRE HYDRANT SW CORNER OF LAGUNA BLVD. AND GARDINA DRIVE (ELEV. = 7.30)

BENCHMARK NO. 2
TOP OF SANITARY SEWER MANHOLE NE CORNER OF PADRE BOULEVARD AND GARDINA DRIVE (ELEV. = 2.42)

DISCLAIMER
QUANTITIES ARE ONLY ESTIMATES, CONTRACTOR TO VERIFY. ENGINEER TO BE NOTIFIED IMMEDIATELY OF ANY DISCREPANCIES.

LEGEND

	REMOVE EXISTING CONCRETE DRIVEWAY (APPROACH)
	REMOVE EXISTING ASPHALT DRIVEWAY (APPROACH)
	REMOVE EXISTING DRIVEWAY PAVERS (APPROACH)
	REMOVE EXISTING ROADWAY PAVEMENT OR REUSE AS BASE SALAVAGED MATERIAL
XXX SF	EXISTING DRIVEWAY SQUARE FOOTAGE TO BE REMOVED

EXISTING QUANTITY ESTIMATE

02 EA.	ADJUST EXISTING WATER VALVE
00 EA.	RELOCATE EXISTING UTILITY PEDESTAL
160 LF.	REMOVE EXISTING "A" CURB
01 EA.	REMOVE EXISTING STREET SIGN
00 EA.	REMOVE EXISTING TREE
06 EA.	REMOVE AND REPLACE EXISTING PALM TREE
28 SY	REMOVE EXISTING CONCRETE DRIVEWAYS
412 SY	REMOVE EXISTING ASPHALT DRIVEWAYS
986 SY	REMOVE EXISTING ROADWAY PAVEMENT OR REUSE AS BASE MATERIAL

REV.	DATE	DESCRIPTION

2025 SIDE STREET IMPROVEMENTS PHASE 1
(WEST GARDENIA DRIVE)

REMOVE/REPLACE/RELOCATE AND ADJUST PLAN

South Padre ISLAND

PUBLIC WORKS
4601 PADRE BLVD.
SOUTH PADRE ISLAND
TEXAS 78597
(956) 761-8158

SCALE: 1"=30'
DRAWN BY: CAS/DWB
DATE: 08/29/2025
FILE: WEST GARDINA

SHEET 19 OF 29

DISCLAIMER

QUANTITIES ARE ONLY ESTIMATES, CONTRACTOR TO VERIFY. ENGINEER TO BE NOTIFIED IMMEDIATELY OF ANY DISCREPANCIES.

ALL WET AND DRY UTILITY LOCATIONS ARE THE RESPONDSIBILTY OF THE CONTRACTOR.

CAUTION

CONTRACTOR TO MAINTAIN THE SEPERATION OF SAN. SEWER AND STORM SEWER PER TCEQ STANADRS. IMEDIATLY NOTIFY THE ENGINEER OF RECORD AND LMWD OF ANY DIRECT CONFLICTS.

GRAPHIC SCALE

0 15 30

(IN FEET)
1 inch = 30 ft.

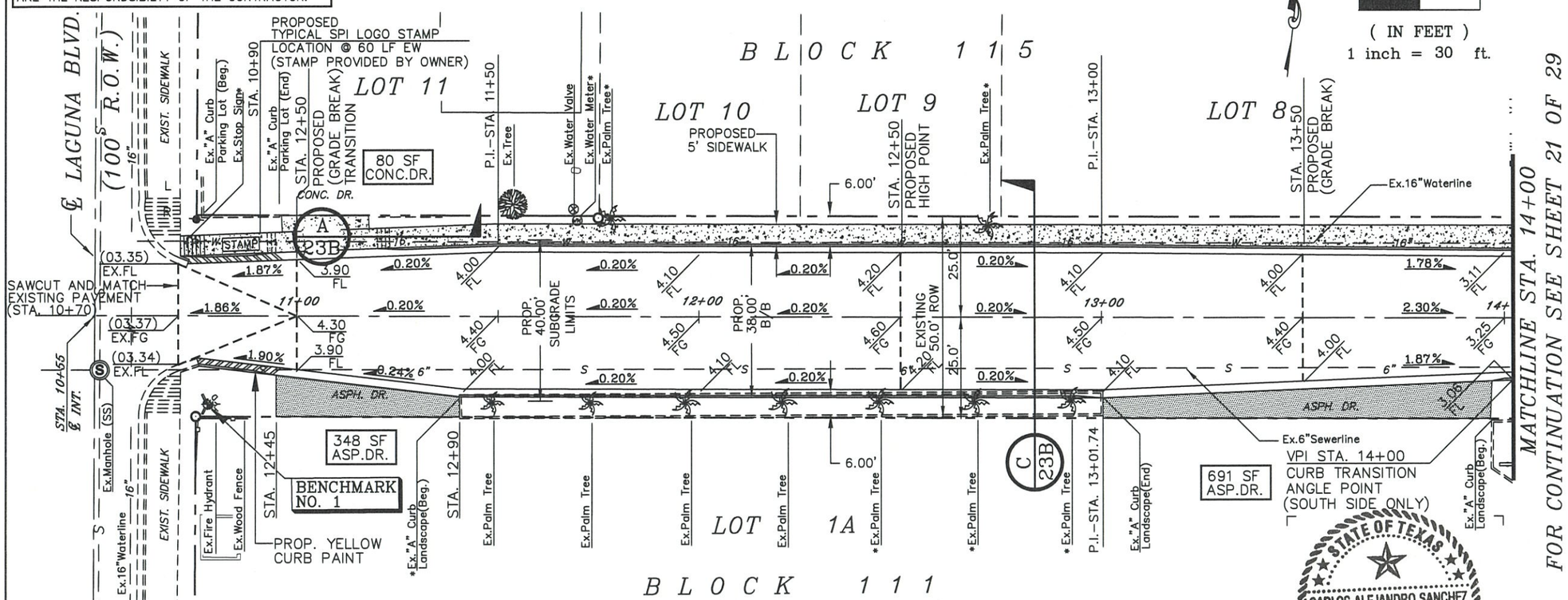

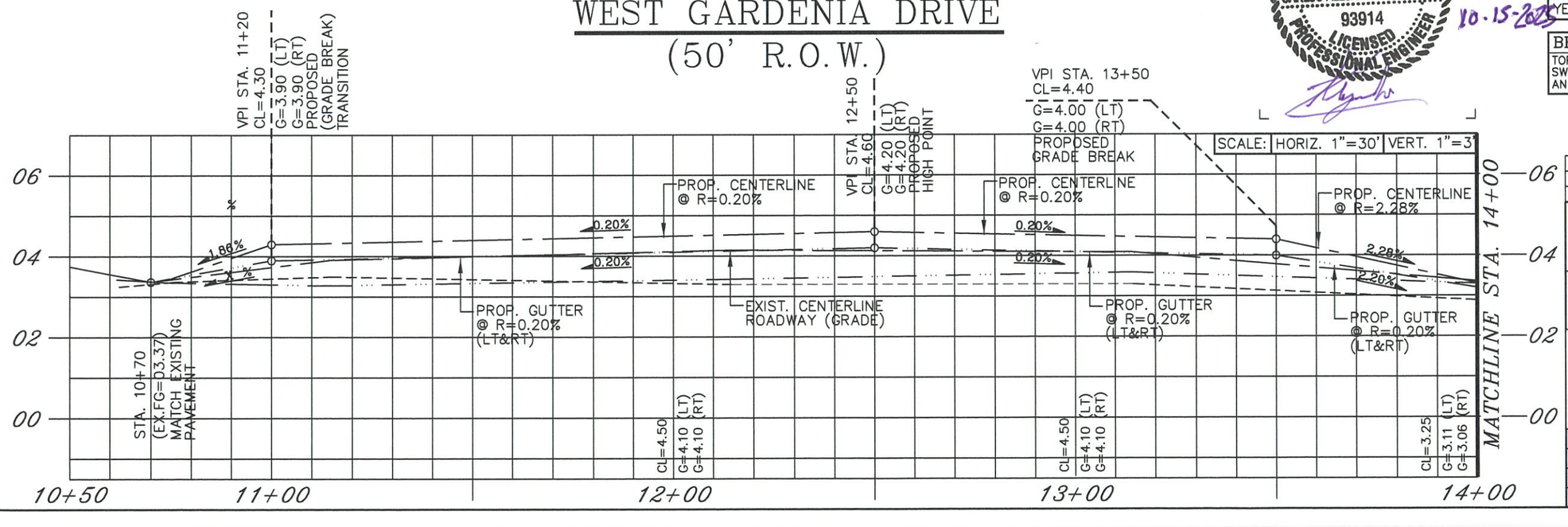

LEGEND

	EXIST. CENTERLINE
	EXIST. LEFT SWALE
	EXIST. RIGHT SWALE
	PROP. CENTERLINE
	PROP. LEFT GUTTER
	PROP. RIGHT GUTTER
	PROP. GRADE BREAK
	EXIST. SAN SEW. LINE
	EXIST. RIGHT OF WAY
	PROP.CONCRETE
R L R	PROP. DRIVEWAY RAMP L=LANDING/R=RAMP
S	EXIST. SAN, SEW. MANHOLE
	EXIST. IRON PIN FD.
	EXST. CONC. MON. FD.
	EXIST. PALM TREE
	EXIST. SMALL TREE
STAMP	PROP. SPI LOGO STAMP
XXX SF DRIVE	PROP. DRIVEWAY QUANTITY (CONCRETE OR ASPHALT)
*	SEE REMOVAL PLAN SHT. 19

PROPOSED QUANTITY ESTIMATE

DESCRIPTION	UNIT	QTY.
CURB & GUTTER	LF	650
DRIVEWAY RAMP (SIDEWALK)	EA	02
TYPE X ADA RAMP	EA	01
5' WIDE CONCRETE SIDEWALK	SY	183
ASPHALT DRIVEWAY	SY	115
CONCRETE DRIVEWAY	SY	09
STAMPED SPI LOGO	EA	05
YELLOW CURB PAINT	LF	45

BENCHMARK NO. 1

TOP OF NUT AT FIRE HYDRANT SW CORNER OF LAGUNA BLVD. AND GARDINA DRIVE (ELEV. = 7.30)

STATE OF TEXAS
CARLOS ALEJANDRO SANCHEZ
93914
LICENSED PROFESSIONAL ENGINEER
10-15-2025

811 Know what's below. Call before you dig.

REV.	DATE	DESCRIPTION

2025 SIDE STREET IMPROVEMENTS PHASE 1
(WEST GARDENIA DRIVE)

PLAN & PROFILE SHEET
(STA. 10+70 TO STA. 14+00)

South Padre ISLAND

PUBLIC WORKS
4601 PADRE BLVD,
SOUTH PADRE ISLAND
TEXAS 78597
(956) 761-8158

SCALE: 1"=30'
DRAWN BY: CAS/DWB
DATE: 08/29/2025
FILE: WEST GARDINA

SHEET 20 OF 29

DISCLAIMER

QUANTITIES ARE ONLY ESTIMATES, CONTRACTOR TO VERIFY. ENGINEER TO BE NOTIFIED IMMEDIATELY OF ANY DISCREPANCIES.

ALL WET AND DRY UTILITY LOCATIONS ARE THE RESPONDSIBILTY OF THE CONTRACTOR.

CAUTION

CONTRACTOR TO MAINTAIN THE SEPERATION OF SAN. SEWER AND STORM SEWER PER TCEQ STANADRS. IMEDIATLY NOTIFY THE ENGINEER OF RECORD AND LMWD OF ANY DIRECT CONFLICTS.

GRAPHIC SCALE

0 15 30

(IN FEET)
1 inch = 30 ft.

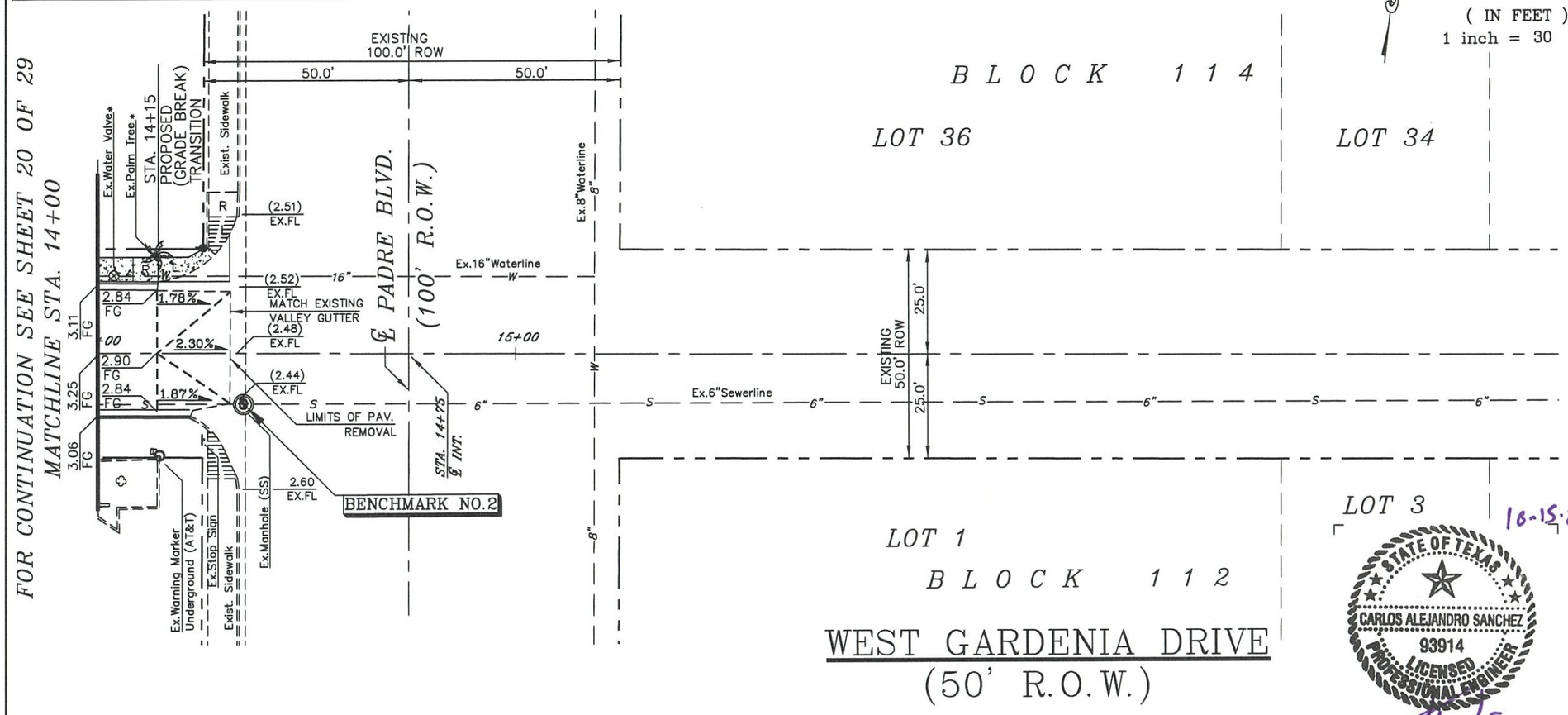

LEGEND	
	EXIST. CENTERLINE
	EXIST. LEFT SWALE
	EXIST. RIGHT SWALE
	PROP. CENTERLINE
	PROP. LEFT GUTTER
	PROP. RIGHT GUTTER
	PROP. GRADE BREAK
	EXIST. SAN SEW. LINE
	EXIST. RIGHT OF WAY
	PROP.CONCRETE
R L R	PROP. DRIVEWAY RAMP L=LANDING/R=RAMP
S	EXIST. SAN, SEW. MANHOLE
	EXIST. IRON PIN FD.
	EXST. CONC. MON. FD.
	EXIST. PALM TREE
	EXIST. SMALL TREE
STAMP	PROP. SPI LOGO STAMP
XXX SF DRIVE	PROP. DRIVEWAY QUANTITY (CONCRETE OR ASPHALT)
*	SEE REMOVAL PLAN SHT. 19

PROPOSED QUANTITY ESTIMATE

DESCRIPTION	UNIT	QTY.
CURB & GUTTER	LF	15
5' WIDE CONCRETE SIDEWALK	SY	20
TYPE X ADA RAMP	EA	01
STAMPED SPI LOGO	EA	01

BENCHMARK NO. 2

TOP OF SANITARY SEWER MANHOLE SW CORNER OF PADRE BOULEVARD AND GARDINA DRIVE (ELEV. = 2.42)

10-15-2025

STATE OF TEXAS
CARLOS ALEJANDRO SANCHEZ
93914
LICENSED
PROFESSIONAL ENGINEER

811 Know what's below. Call before you dig.

SCALE: HORIZ. 1"=30' VERT. 1"=3'

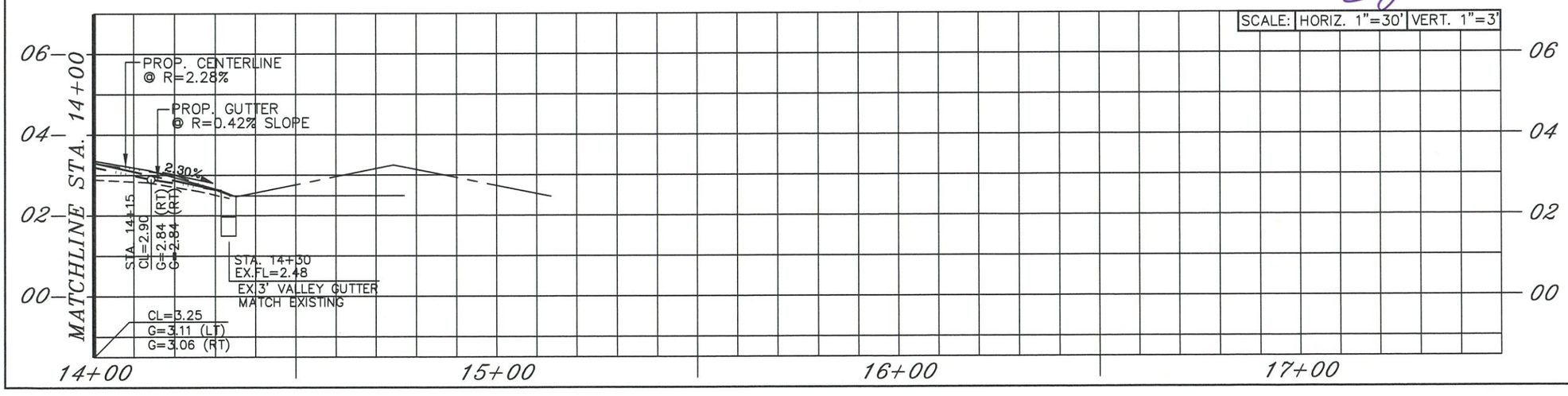

REV.	DATE	DESCRIPTION

2025 SIDE STREET IMPROVEMENTS PHASE 1
(WEST GARDENIA DRIVE)

PLAN & PROFILE SHEET
(STA. 14+00 TO STA. 14+30)

South Padre ISLAND

PUBLIC WORKS

4601 PADRE BLVD,
SOUTH PADRE ISLAND
TEXAS 78597
(956) 761-8158

SCALE: 1"=30'
DRAWN BY: CAS/DWB
DATE: 08/29/2025
FILE: WEST GARDINA

SHEET 21 OF 29

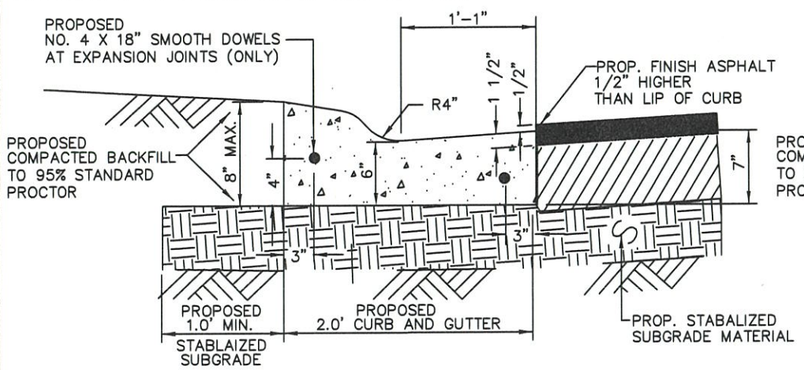

ROLL TYPE CURB DETAIL (TXDOT)

SCALE: 1" = 1'

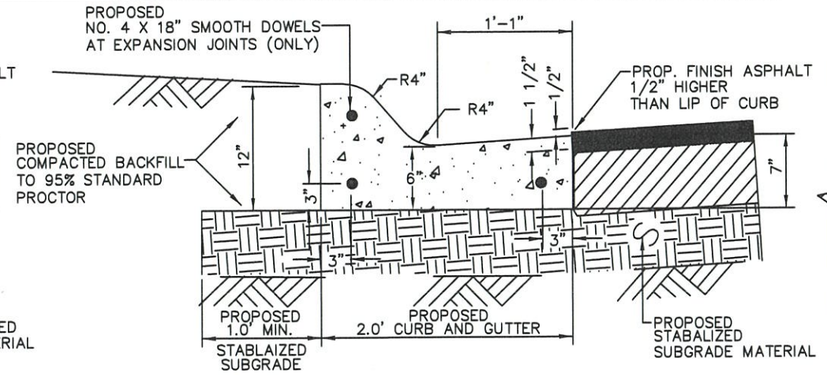

"L" TYPE CURB DETAIL (TXDOT)

SCALE: 1" = 1'

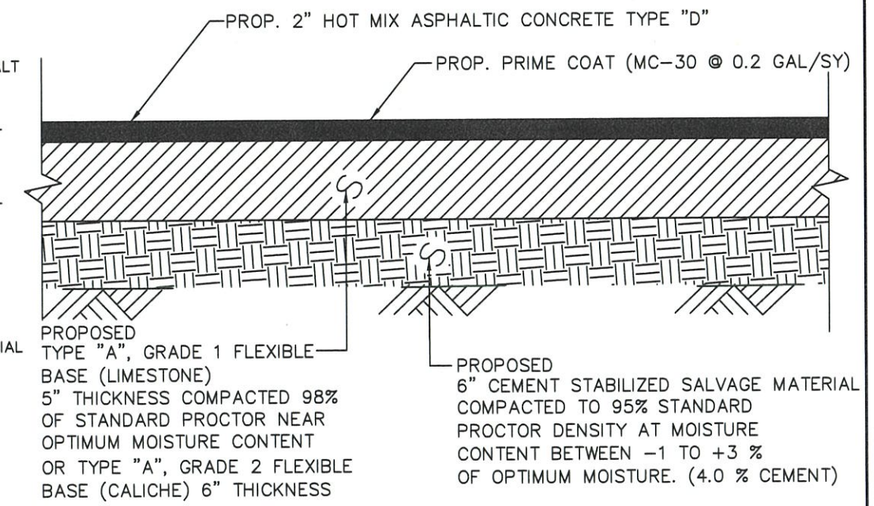

SALVAGED SUBGRADE MATERIAL SECTION (ROADWAY)

NOTE:

Expansion joints will be placed at curb returns, inlets, and end of each pour with intervals not to exceed 40 L.F. Joints will consists of 1/2" pre-molded expansion joint material with 3 – 18" x 1/2" dowels, one end greased and wrapped. Care must be taken that the dowels are straight and laid parallel with curb and no concrete "plugs" or other material be allowed through the dowel holes or expansion material that would prevent joint from operating as an expansion joint. Expansion joint material shall be pre-molded asphalt impregnated expansion joint material conforming to ASTM D 994 (NOT WOOD FIBER TYPE)

Dummy joints shall be 2" deep and placed at 10 ft. intervals.

Concrete shall be 3000 psi conforming to the requirement of "Reinforced Concrete Structures", when not shown on the drawings, and shall also contain 1.5 lbs. of fibermesh per cubic yard.

All exposed concrete surfaces, (sidewalks, concrete pavement, curb & gutter, etc.) shall be treated with curing compound, resin base ASTM C 309, Type 2 with pigmented tint of fugitive dye.

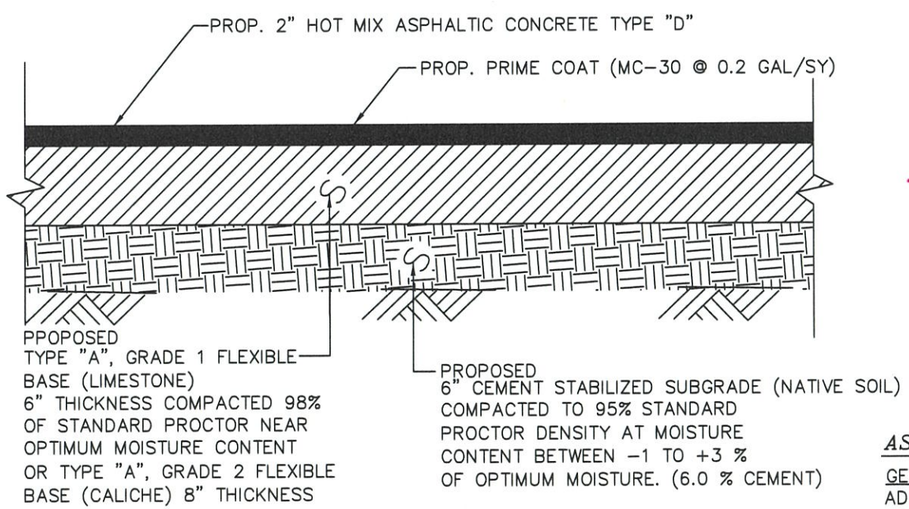

NEW SUBGRADE MATERIAL SECTION (ROADWAY)

ASPHALT PAVEMENT STANDARD (TXDOT)

2" THICK HOT MIX ASPHALTIC CONCRETE TYPE "D" MEETING THE REQUIREMENTS OF 1995 TXDOT SPECIFICATION ITEM 340 AND SPECIFIC CRITERIA FOR JOB MIXING.

HVEEM STABITITY SHALL BE AT LEAST 40.

COMPACTION STABILITY SHALL BE BETWEEN 91 AND 95 PERCENT OF MAXIMUM THEORETICAL DENSITY.

ASPHALTIC CEMENT CONTENT SHALL BE WITHIN TOLERANCE OF ±3 PERCENT OF SPECIFIC MIX DESIGN.

75 TO 85 PERCENT OF THE VOIDS OF THE MINERAL AGGREGATE SHALL BE FILLED WITH APHALTIC CEMENT.

SALVAGE COURSE:

THE PROPOSED STABILIZED SALVAGE COURSE SHALL INCLUDE THE EXISTING HMAC (ACP), EXISTING BASE AND EXISTING SUBGRADE. THE PROPOSED SALVAGE COURSE SHALL BE SCARIFIED, REMOVED AND REPLACED. THE SALVAGE SHALL BE MIXED AND SPREAD EVENLY WITHIN THE SUBGRADE LIMITS BEFORE CEMENT IS ADDED.

THE EXISTING HMAC IS ASSUMED TO BE 2", AND THE EXISTING BASE IS ASSUMED TO BE 6". A TOTAL OF 8" WITHIN THE LIMITS OF THE EXISTING PAVEMENT WILL BE SALVAGED FOR USE FOR THE SUBGRADE MATERIAL. AN ADDITIONAL 2" TO 5" OF EXISTING SUBGRADE SHALL BE REMOVED AND STOCKPILED FOR USED AS FILL. EXCAVATION WITHIN THE LIMITS OF THE SUBGRADE LIMITS (33') WILL BE SUBSIDUIARY TO THE 6" SALVAGE MATERIAL UNLESS OTHERWISE NOTED.

ASPHALT STRUCTURAL NOTES

GEORGIA RUTH DRIVE
ADT: 460
MINIMUM STRUCTURAL NUMBER: 2.64

CONSTELLATION DRIVE
ADT: 312
MINIMUM STRUCTURAL NUMBER: 1.98

GARDENIA DRIVE
ADT: 479
MINIMUM STRUCTURAL NUMBER: 2.64

10-15-2025

STATE OF TEXAS
CARLOS ALEJANDRO SANCHEZ
93914
LICENSED
PROFESSIONAL ENGINEER

REV.	DATE	DESCRIPTION

2025 SIDE STREET IMPROVEMENTS PHASE 1

PAVEMENT AND CURB DETAILS

South Padre ISLAND

PUBLIC WORKS
4601 PADRE BLVD.
SOUTH PADRE ISLAND
TEXAS 78597
(956) 761-8156

SCALE: NONE	SHEET
DRAWN BY: CAS/DWB	22
DATE: 08/29/2025	OF 29
FILE: EAST GEORGIA RUTH	

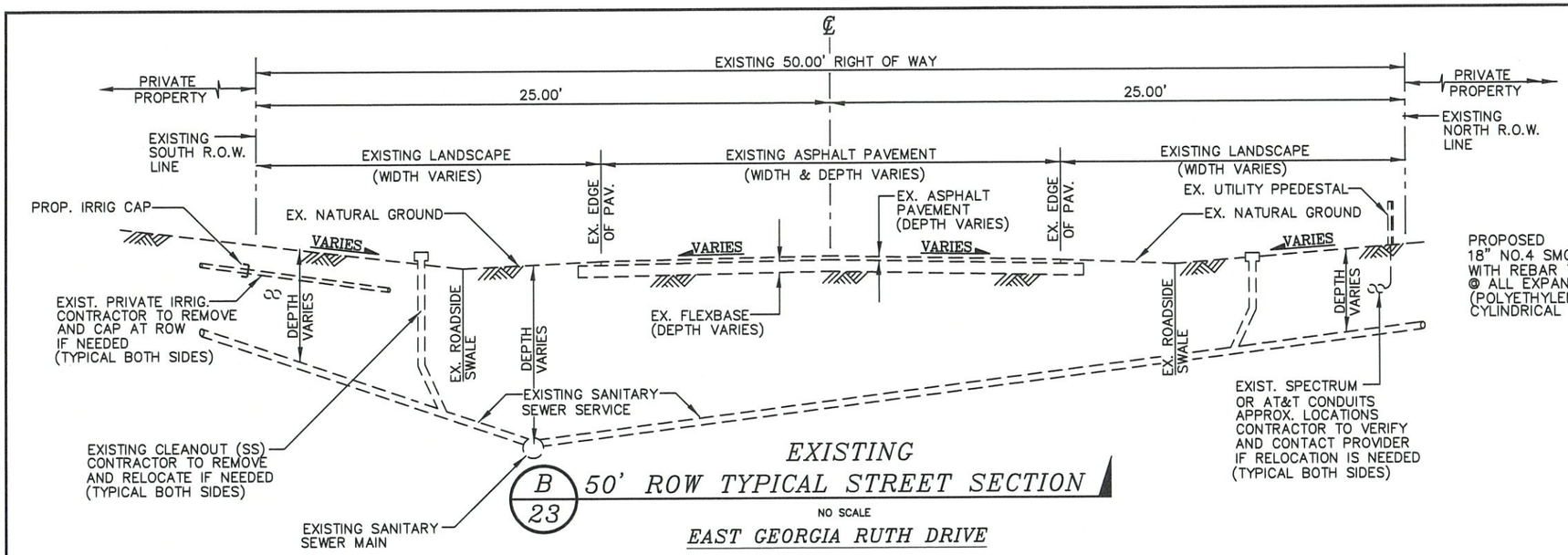

B / 23 — EXISTING 50' ROW TYPICAL STREET SECTION

NO SCALE

EAST GEORGIA RUTH DRIVE

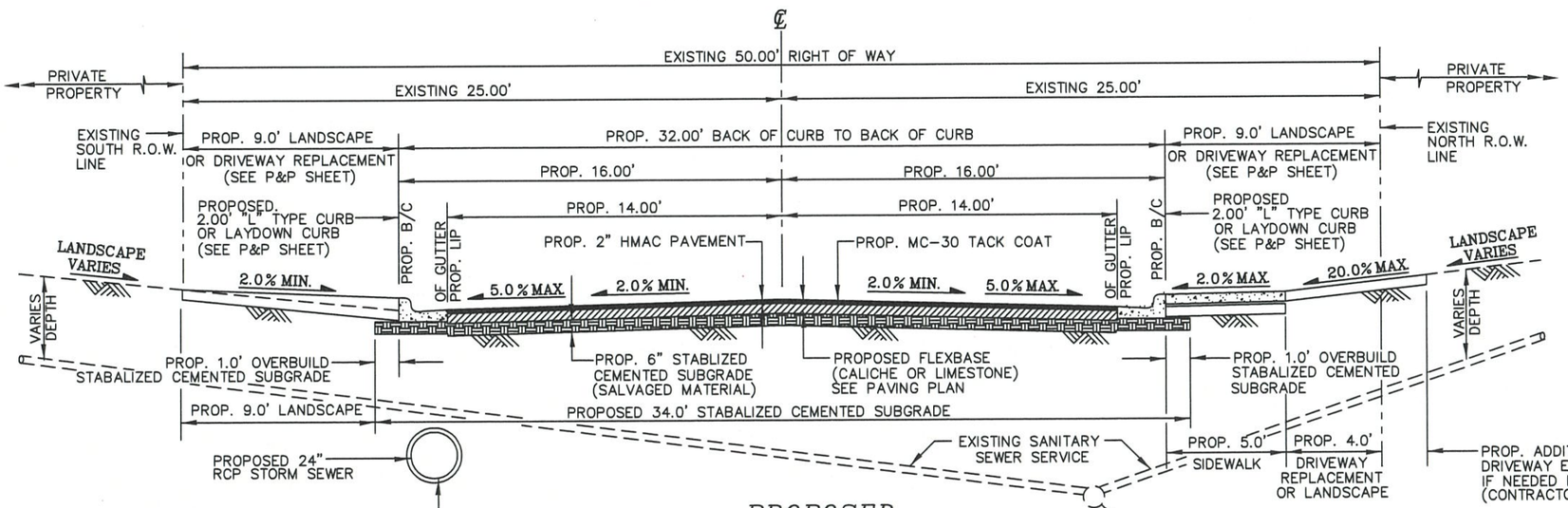

CAUTION
CONTRACTOR TO MAINTAIN THE SEPERATION OF SAN. SEWER AND STORM SEWER PER TCEQ STANDARDS. IMEDIATLY NOTIFY THE ENGINEER OF RECORD AND LMWD OF ANY DIRECT CONFLICTS

C / 23 — PROPOSED 50' ROW TYPICAL STREET SECTION

NO SCALE

EAST GEORGIA RUTH DRIVE

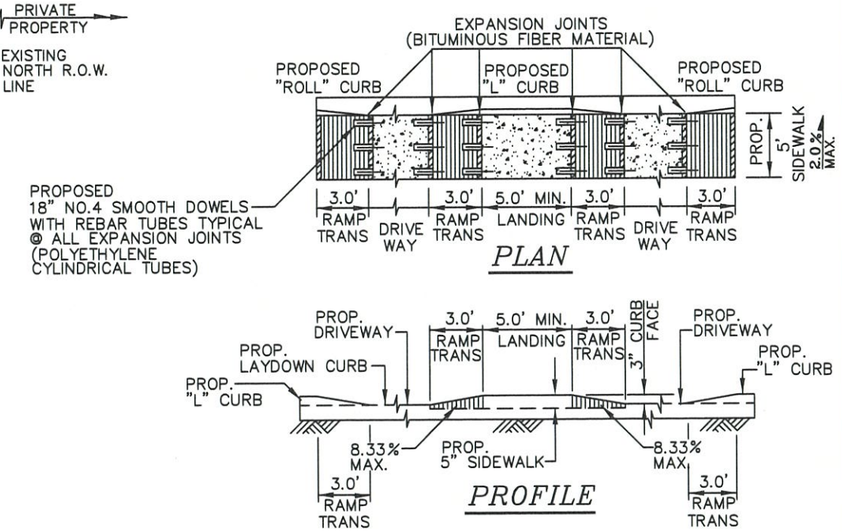

A / 23 — PROPOSED TYPICAL PUBLC SIDEWALK RAMP SECTION @ DRIVEWAY

NO SCALE

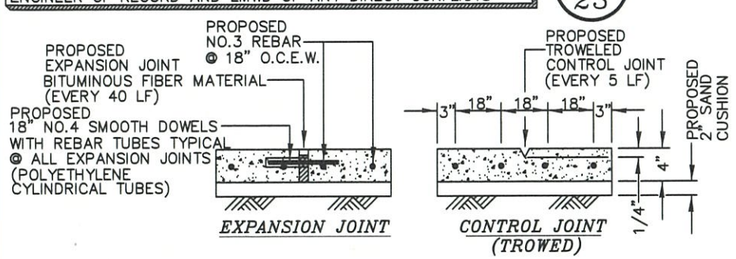

CONCRETE SIDEWALK JOINT/REBAR DETAIL

NO SCALE

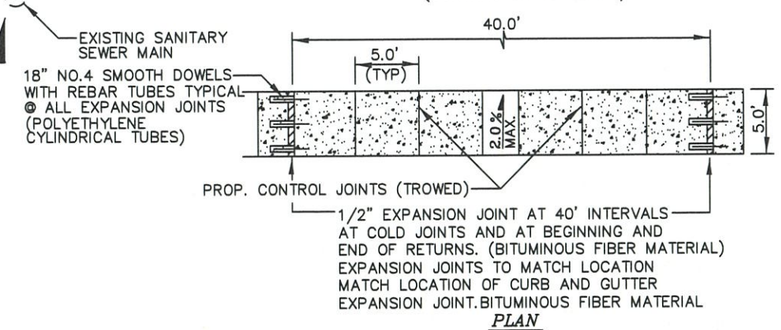

CONCRETE SIDEWALK DETAIL

NO SCALE

10-15-2025

STATE OF TEXAS
CARLOS ALEJANDRO SANCHEZ
93914
LICENSED
PROFESSIONAL ENGINEER

REV.	DATE	DESCRIPTION

2025 SIDE STREET IMPROVEMENTS PHASE 1
(EAST GEORGIA RUTH DRIVE)

TYPICAL STREET SECTION AND SIDEWALK RAMP

South Padre ISLAND

PUBLIC WORKS
4601 PADRE BLVD,
SOUTH PADRE ISLAND
TEXAS 78597
(956) 761-8158

SCALE: NONE	SHEET
DRAWN BY: CAS/DWB	23
DATE: 08/29/2025	
FILE: EAST GEORGIA RUTH	OF 29

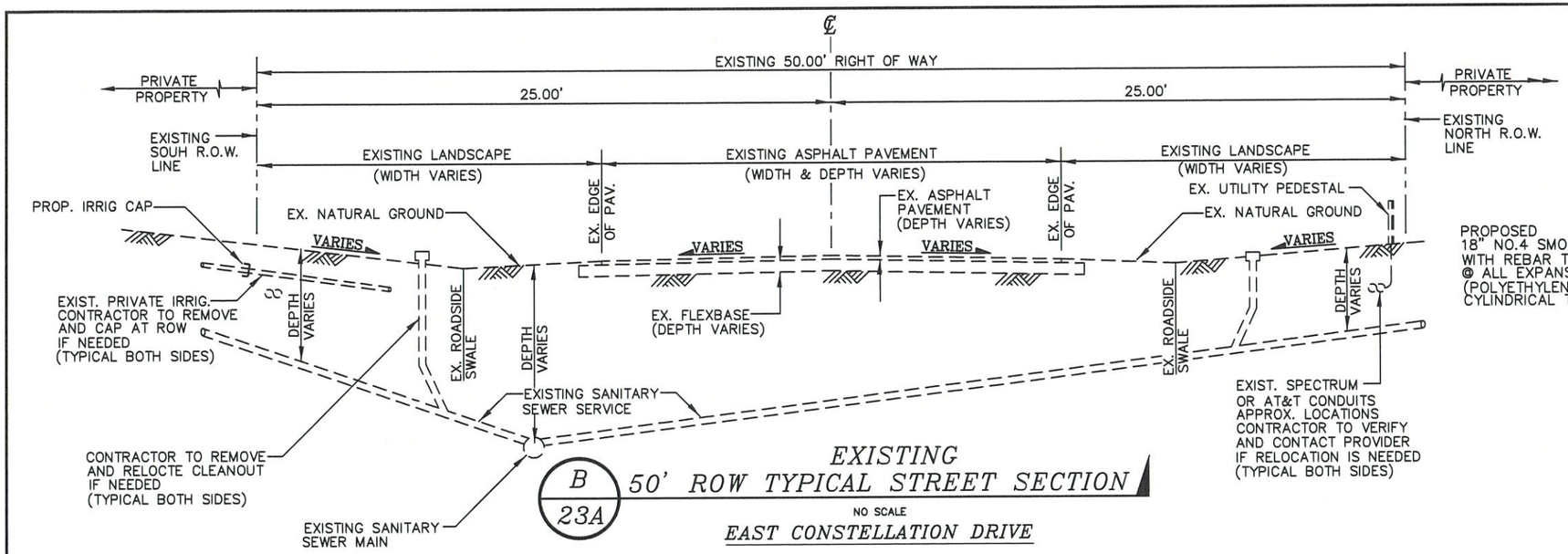

B / 23A — EXISTING 50' ROW TYPICAL STREET SECTION

NO SCALE

EAST CONSTELLATION DRIVE

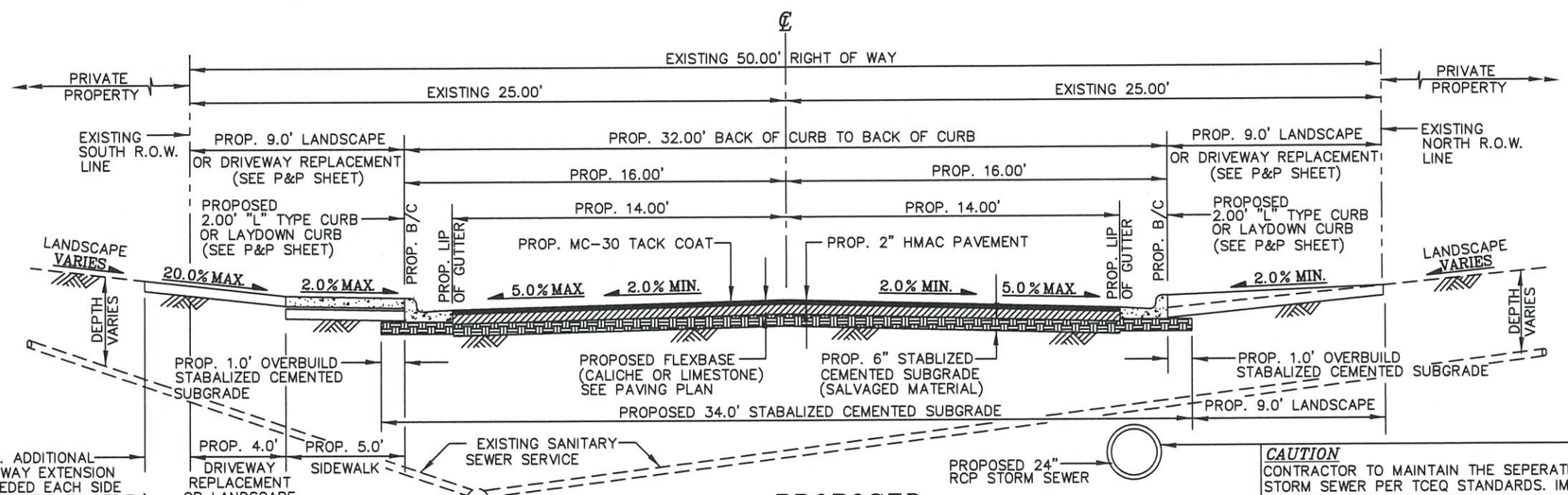

C / 23A — PROPOSED 50' ROW TYPICAL STREET SECTION

NO SCALE

EAST CONSTELLATION DRIVE

CAUTION
CONTRACTOR TO MAINTAIN THE SEPERATION OF SAN. SEWER AND STORM SEWER PER TCEQ STANDARDS. IMEDIATLY NOTIFY THE ENGINEER OF RECORD AND LMWD OF ANY DIRECT CONFLICTS

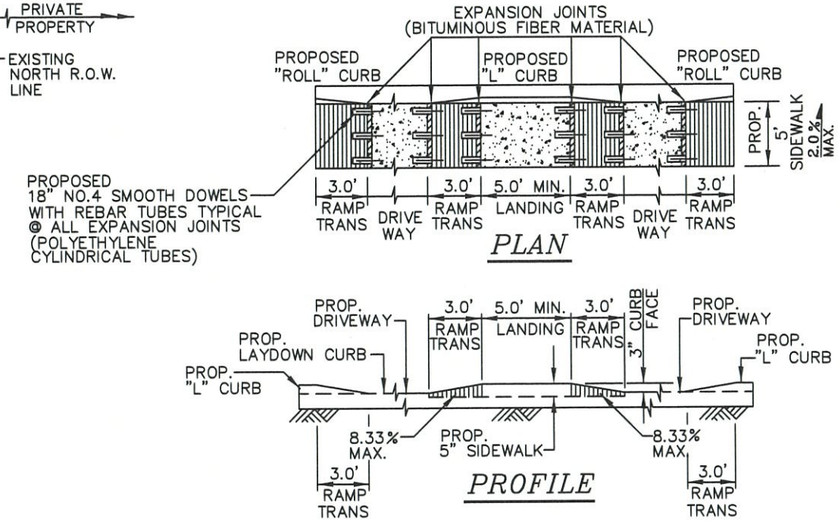

A / 23A — PROPOSED TYPICAL PUBLC SIDEWALK RAMP SECTION @ DRIVEWAY

NO SCALE

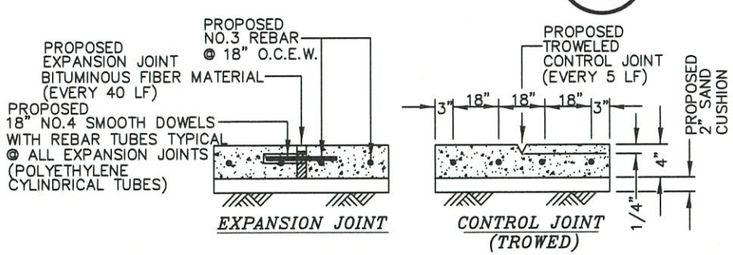

CONCRETE SIDEWALK JOINT/REBAR DETAIL

NO SCALE

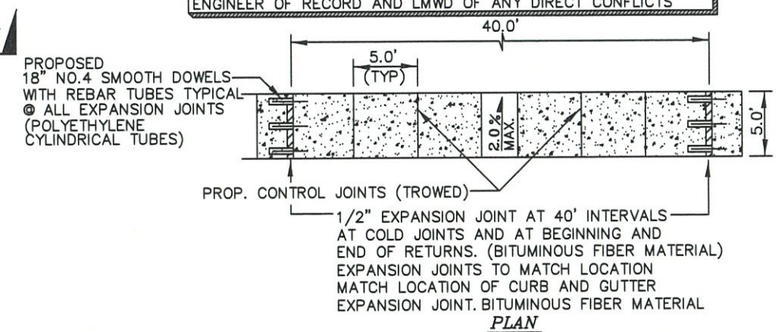

PLAN

CONCRETE SIDEWALK DETAIL

NO SCALE

10-15-2025

STATE OF TEXAS
CARLOS ALEJANDRO SANCHEZ
93914
LICENSED
PROFESSIONAL ENGINEER

REV.	DATE	DESCRIPTION

2025 SIDE STREET IMPROVEMENTS PHASE 1
(EAST CONSTELLATION DRIVE)

TYPICAL STREET SECTION AND SIDEWALK RAMP

South Padre ISLAND

PUBLIC WORKS
4601 PADRE BLVD.
SOUTH PADRE ISLAND
TEXAS 78597
(956) 761-8158

SCALE: NONE	SHEET
DRAWN BY: CAS/DWB	23A
DATE: 08/29/2025	
FILE: EAST CONSTELLATION	OF 29

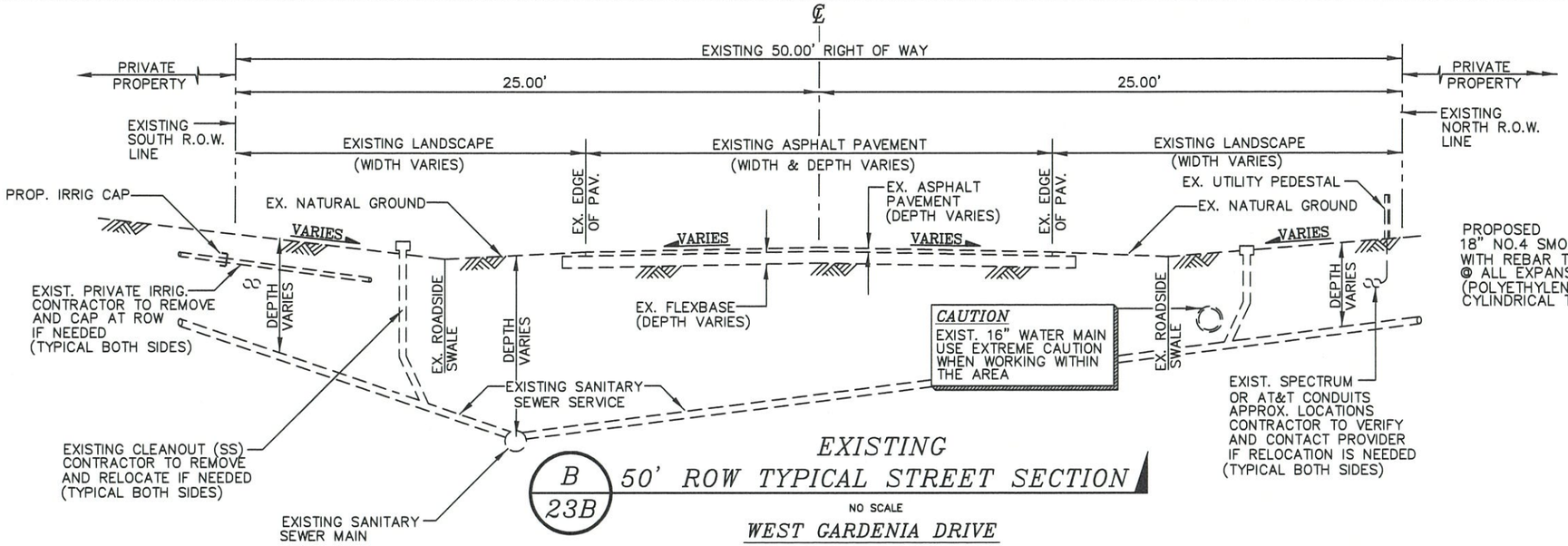

B / 23B — EXISTING 50' ROW TYPICAL STREET SECTION

NO SCALE

WEST GARDENIA DRIVE

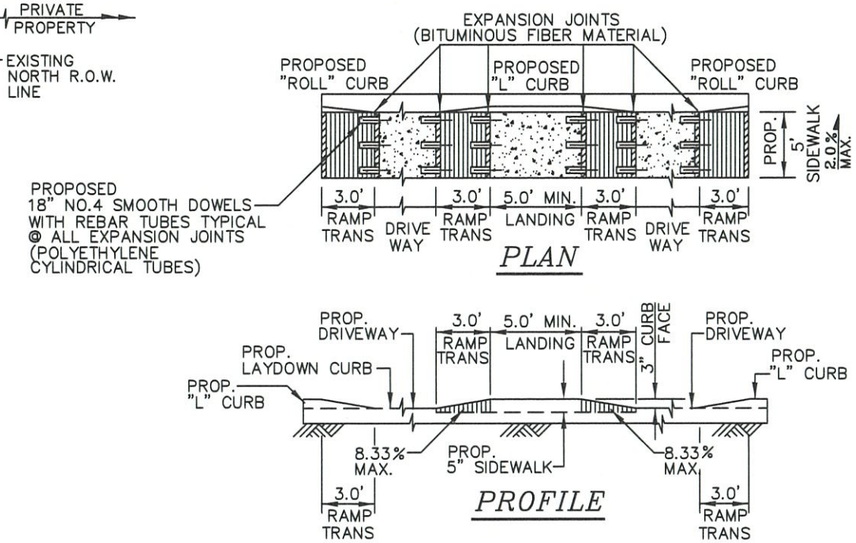

A / 23B — PROPOSED TYPICAL PUBLC SIDEWALK RAMP SECTION @ DRIVEWAY

NO SCALE

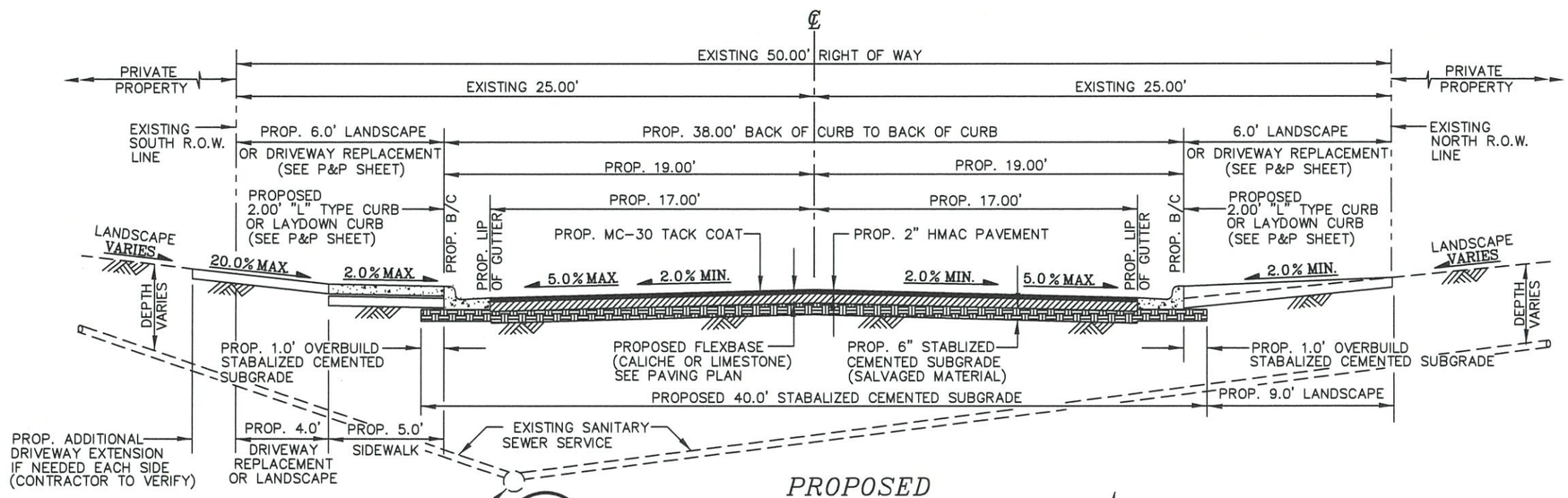

C / 23B — PROPOSED 50' ROW TYPICAL STREET SECTION

NO SCALE

WEST GARDENIA DRIVE

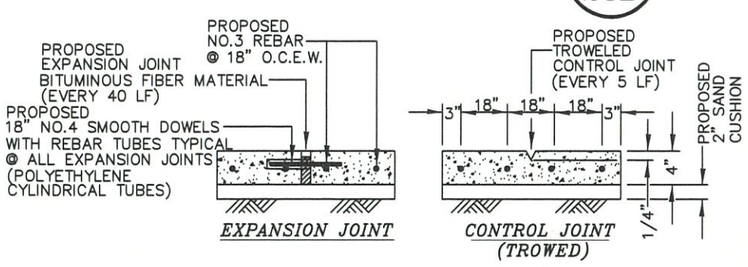

CONCRETE SIDEWALK JOINT/REBAR DETAIL

NO SCALE

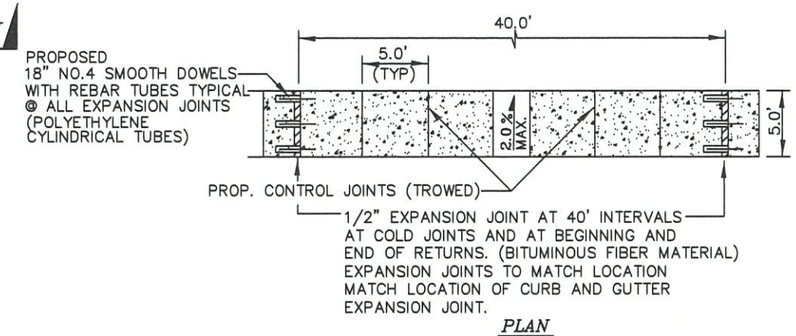

CONCRETE SIDEWALK DETAIL

NO SCALE

10.15.2025

STATE OF TEXAS
CARLOS ALEJANDRO SANCHEZ
93914
LICENSED
PROFESSIONAL ENGINEER

REV.	DATE	DESCRIPTION

2025 SIDE STREET IMPROVEMENTS PHASE 1
(WEST GARDENIA DRIVE)

TYPICAL STREET SECTION AND SIDEWALK RAMP

South Padre ISLAND

PUBLIC WORKS
4601 PADRE BLVD,
SOUTH PADRE ISLAND
TEXAS 78597
(956) 761-8158

SCALE: NONE	SHEET
DRAWN BY: CAS/DWB	23B
DATE: 08/29/2025	OF 29
FILE: WEST GARDINA	

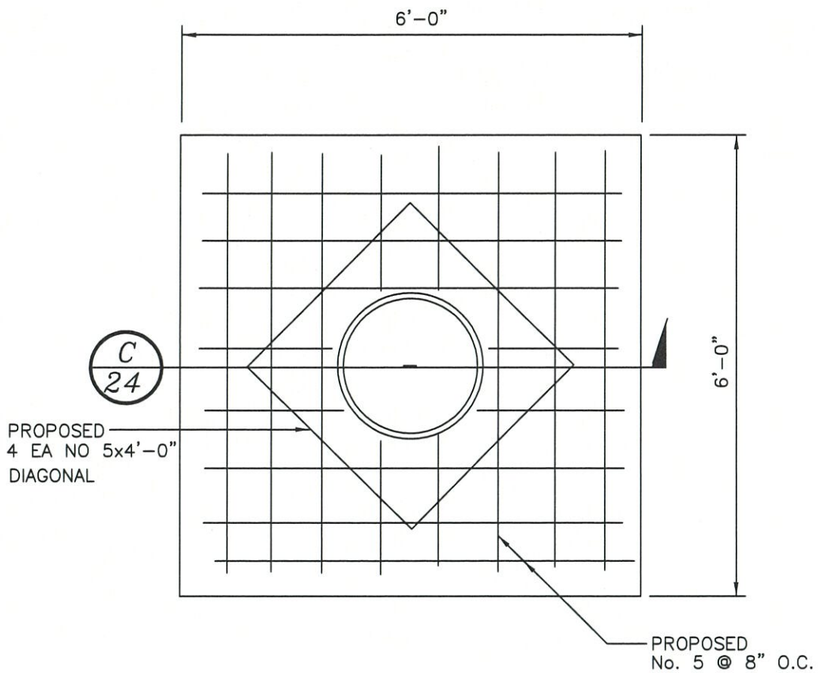

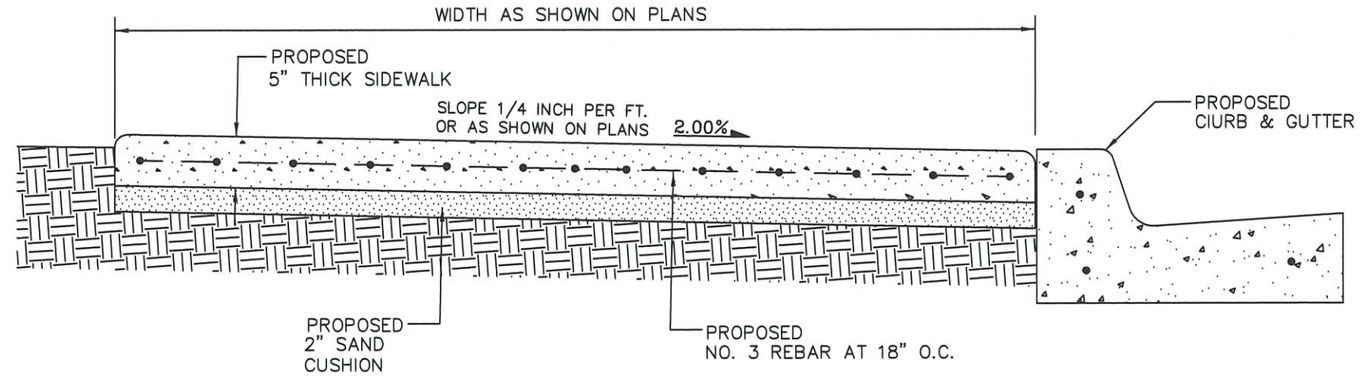

NOTE:
DUMMY JOINT SPACING SHALL BE EQUAL TO SIDEWALK WIDTH AND EXPANSION JOINTS AT APPROXIMATELY 30 FEET OR NEAREST MULTIPLE OF SIDEWALK WIDTH.

STANDARD CONCRETE SIDEWALK

SCALE: 1" = 1'

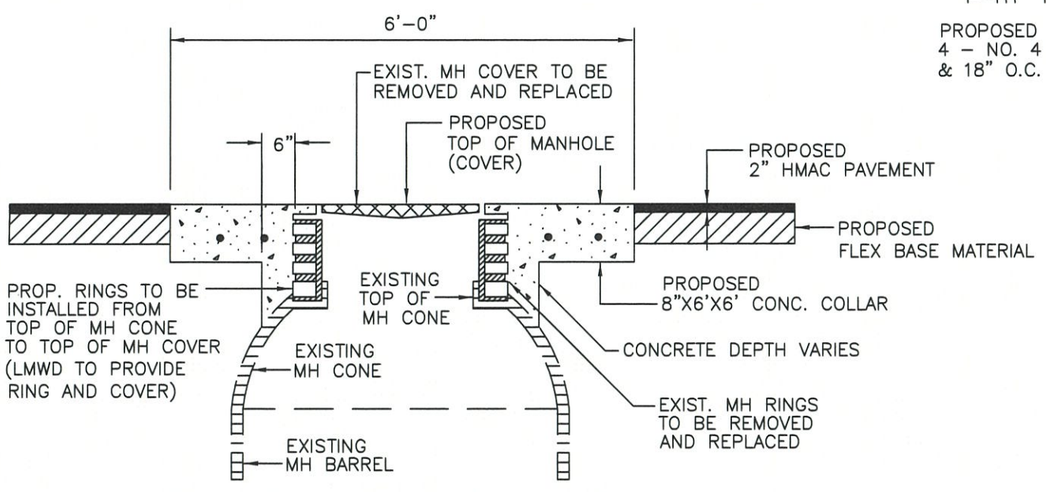

EXISTING SANITARY SEWER TYPICAL FIBERGLASS MANHOLE ADJUSTMENT IN PAVEMENT

C/24 *SECTION C-C*

NOT TO SCALE

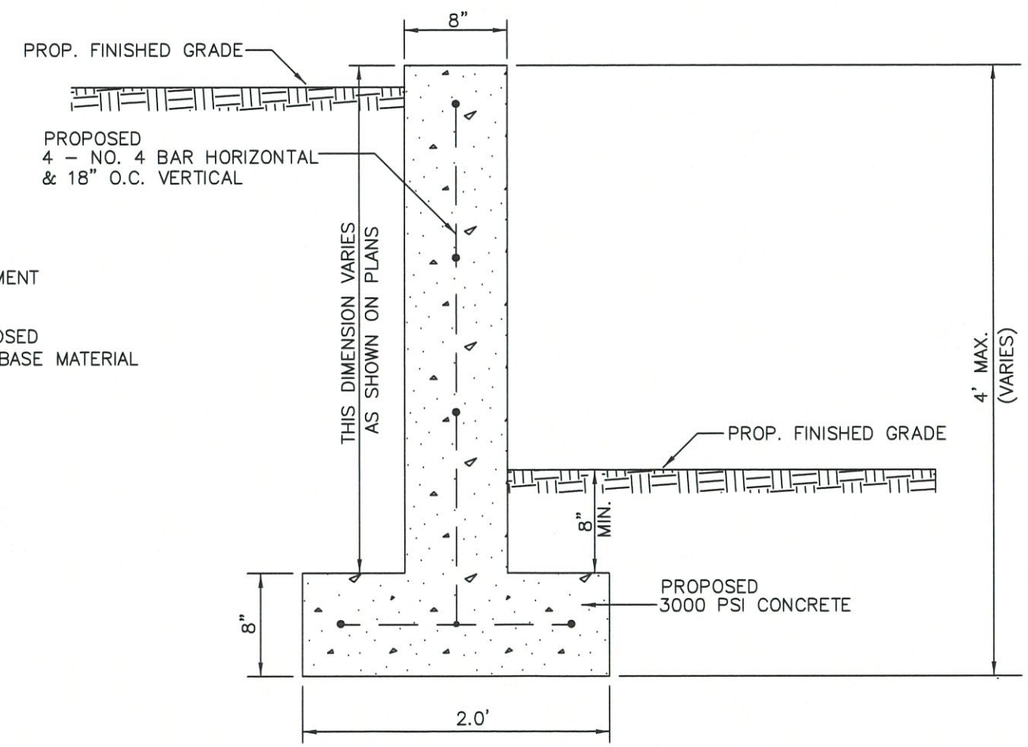

CONCRETE WALL

SCALE: 1"=1'

10-15-2025

STATE OF TEXAS
CARLOS ALEJANDRO SANCHEZ
93914
LICENSED
PROFESSIONAL ENGINEER

REV.	DATE	DESCRIPTION

2025 SIDE STREET IMPROVEMENTS PHASE 1

SITE DETAIL SHEET

PUBLIC WORKS
4601 PADRE BLVD,
SOUTH PADRE ISLAND
TEXAS 78597
(956) 761-8158

SCALE: NONE
DRAWN BY: CAS/DWB
DATE: 08/29/2025
FILE: GARDINA

South Padre ISLAND

SHEET 24 OF 29

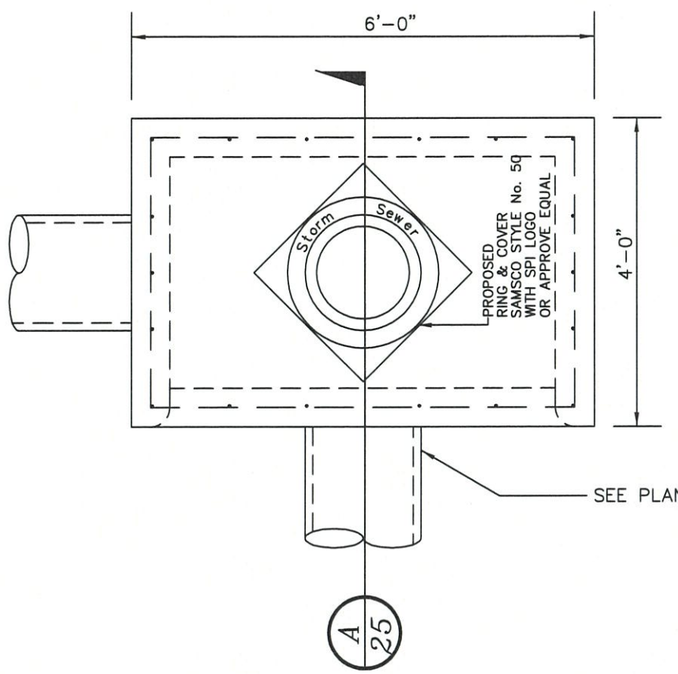

TOP VIEW

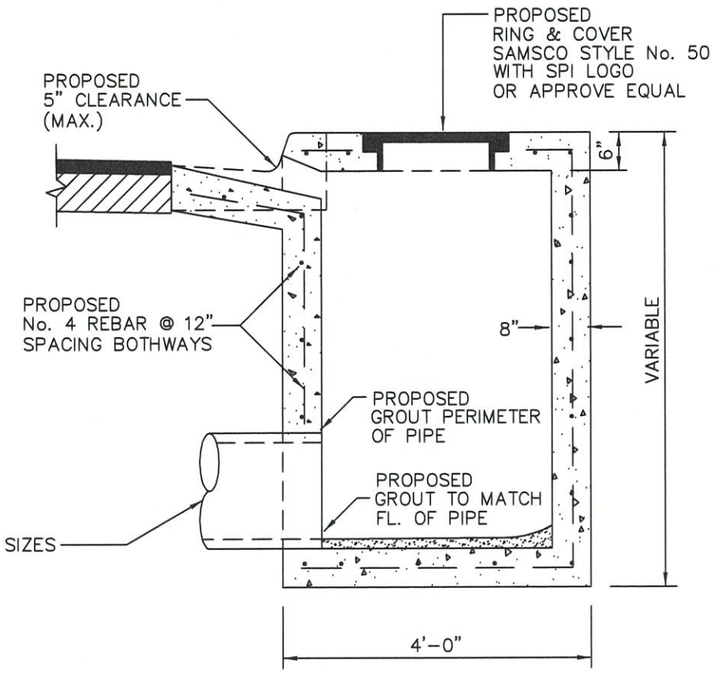

A/25 SECTION A–A

NOT TO SCALE

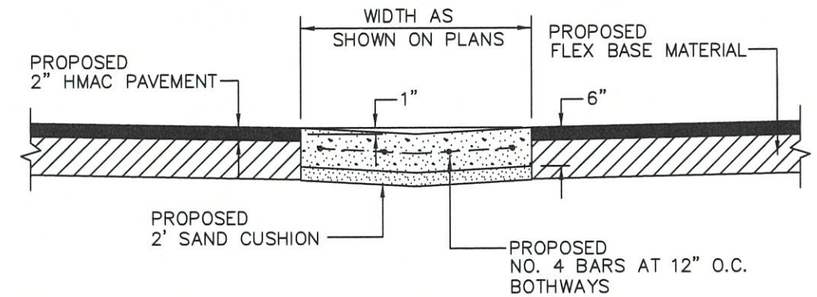

CONCRETE VALLEY GUTTER

NOT TO SCALE

TYPICAL CURB INLET DETAIL

SCALE: 1/2" = 1'

NOTES:

1. PRECAST INLETS (TYPE "A") MAY BE USED.
2. BASES FOR PRECAST INLETS MUST BE POURED PRIOR TO SETTING WALLS.
3. BASE AND REINFORCING SHALL EXTEND AT LEAST 6" BEYOND OUTSIDE OF PRECAST BOXES.
4. CONTACT POINT BETWEEN BASE AND PRECAST BOX WALLS SHALL BE GROUTED INSIDE AND OUTSIDE.

10-15-2025

STATE OF TEXAS
CARLOS ALEJANDRO SANCHEZ
93914
LICENSED
PROFESSIONAL ENGINEER

REV.	DATE	DESCRIPTION

2025 SIDE STREET IMPROVEMENTS PHASE 1

DRAINAGE DETAIL SHEET

South Padre ISLAND

PUBLIC WORKS

4601 PADRE BLVD.
SOUTH PADRE ISLAND
TEXAS 78597
(956) 761-8158

SCALE: NONE	SHEET
DRAWN BY: CAS/DWB	25
DATE: 08/29/2025	OF 29
FILE:	

DISCLAIMER:
The use of this standard is governed by the "Texas Engineering Practice Act". No warranty of any kind is made by TxDOT for any purpose whatsoever. TxDOT assumes no responsibility for the conversion of this standard to other formats or for incorrect results or damages resulting from its use.

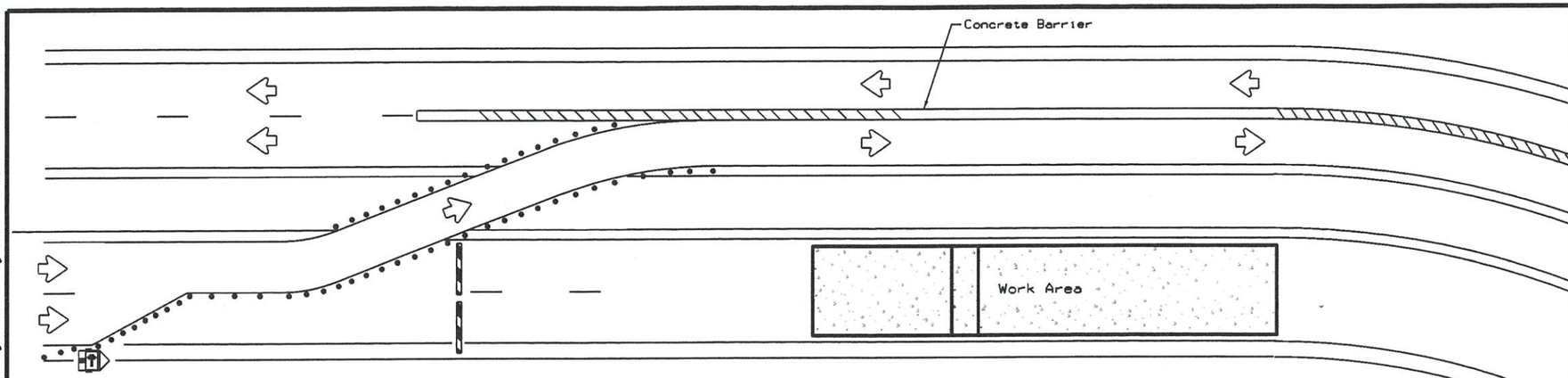

LEGEND

	Type 3 Barricade
• • •	Channelizing Devices
	Trailer Mounted Flashing Arrow Board
	Sign
\\\\	Safety glare screen

DEPARTMENTAL MATERIAL SPECIFICATIONS

SIGN FACE MATERIALS	DMS-8300
DELINEATORS AND OBJECT MARKERS	DMS-8600
MODULAR GLARE SCREENS FOR HEADLIGHT BARRIER	DMS-8610

Only pre-qualified products shall be used. A copy of the Compliant Work Zone Traffic Control Devices List" CWZTCD) describes pre-qualified products and their sources and may be found at the following web address:

http://www.txdot.gov/business/resources/producer-list.html

NOTES:

1. Length of Safety Glare screen will be specified elsewhere in the plans.
2. The cumulative nominal length of the modular safety glare screen units shall equal the length of the individual sections of temporary concrete traffic barrier on which they are installed so the joint between barrier sections will not be spanned by any one safety glare screen unit.
3. Screen Panel/blades will be designed such that reflective sheeting conforming with Departmental Material Specification DMS-8300, Sign Face Materials, Type B or C Yellow, minimum size of 2 inches by 12 inches can be attached to the edge of the panel/blade. The sheeting shall be attached to one glare screen panel/blade per section of concrete barrier not to exceed a spacing of 30 feet. Barrier reflectors are not necessary when panel/blades are installed with reflective sheeting as described.
4. Payment for these devices will be under statewide Special Specification "Modular Glare Screens for Headlight Barrier."
5. This detail is only intended to show types of locations where Glare Screens would be appropriate. Required signing and other devices shall be as shown elsewhere in the plans.

BARRIER DELINEATION WITH MODULAR GLARE SCREENS

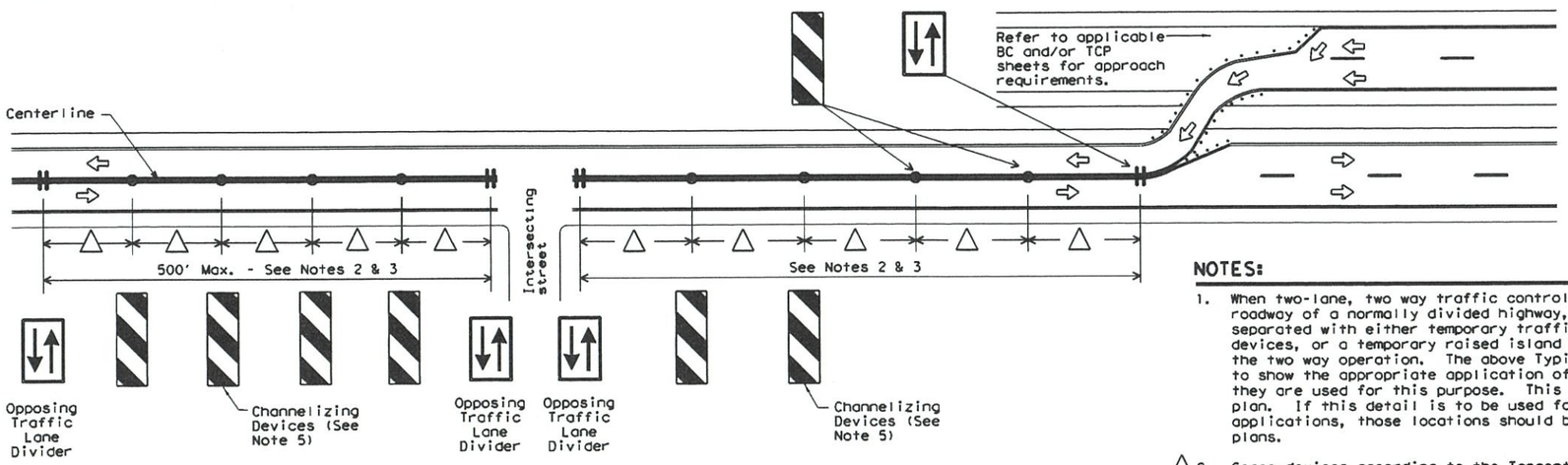

VERTICAL PANELS & OPPOSING TRAFFIC LANE DIVIDERS (OTLD) SEPARATING TWO-WAY TRAFFIC ON NORMALLY DIVIDED HIGHWAYS

NOTES:

1. When two-lane, two way traffic control must be maintained on one roadway of a normally divided highway, opposing traffic shall be separated with either temporary traffic barriers, channelizing devices, or a temporary raised island throughout the length of the two way operation. The above Typical Application is intended to show the appropriate application of channelizing devices when they are used for this purpose. This is not a traffic control plan. If this detail is to be used for other types of roads or applications, those locations should be stated elsewhere in the plans.
2. △ Space devices according to the Tangent Spacing shown on the Device Spacing table on BC(9) but not exceeding 100'.
3. Every fifth device should be an OTLD except when spaced closer to accommodate an intersection. An OTLD should be the first device on each side of intersecting streets or roads.
4. Locations where surface mount bases with adhesives or self-righting devices will be required in order to maintain them in their proper position should be noted elsewhere in the plans.
5. Channelizing devices are to be vertical panels, 42" cones or tubular markers that are at least 36" tall. Tubular markers used to separate traffic should have a rubber base weighing at least 30 pounds. Tubular markers that are 42" tall or more shall have four bands of reflective material as detailed for 42" cones on BC(10). Tubular markers less than 42" but at least 36" tall shall have three bands of 3" wide white reflective material spaced 2" apart. Reflective material shall meet DMS-8300, Type A.

Texas Department of Transportation — Traffic Operations Division Standard

TRAFFIC CONTROL PLAN TYPICAL DETAILS

WZ(TD)-17

FILE: wztd-17.dgn	DN: TxDOT	CK: TxDOT	DW: TxDOT	CK: TxDOT	
© TxDOT February 1998	CONT	SECT	JOB	Sheet	
REVISIONS 4-98 2-17 3-03 7-13	DIST		COUN	26 of 29	

DATE:
FILE:

DISCLAIMER:
The use of this standard is governed by the "Texas Engineering Practice Act". No warranty of any kind is made by TxDOT for any purpose whatsoever. TxDOT assumes no responsibility for the conversion of this standard to other formats or for incorrect results or damages resulting from its use.

BARRICADE AND CONSTRUCTION (BC) STANDARD SHEETS GENERAL NOTES:

1. The Barricade and Construction Standard Sheets (BC sheets) are intended to show typical examples for placement of temporary traffic control devices, construction pavement markings, and typical work zone signs. The information contained in these sheets meet or exceed the requirements shown in the "Texas Manual on Uniform Traffic Control Devices" (TMUTCD).

2. The development and design of the Traffic Control Plan (TCP) is the responsibility of the Engineer.

3. The Contractor may propose changes to the TCP that are signed and sealed by a licensed professional engineer for approval. The Engineer may develop, sign and seal Contractor proposed changes.

4. The Contractor is responsible for installing and maintaining the traffic control devices as shown in the plans. The Contractor may not move or change the approximate location of any device without the approval of the Engineer.

5. Geometric design of lane shifts and detours should, when possible, meet the applicable design criteria contained in manuals such as the American Association of State Highway and Transportation Officials (AASHTO), "A Policy on Geometric Design of Highways and Streets," the TxDOT "Roadway Design Manual" or engineering judgment.

6. When projects abut, the Engineer(s) may omit the END ROAD WORK, TRAFFIC FINES DOUBLE, and other advance warning signs if the signing would be redundant and the work areas appear continuous to the motorists. If the adjacent project is completed first, the Contractor shall erect the necessary warning signs as shown on these sheets, the TCP sheets or as directed by the Engineer. The BEGIN ROAD WORK NEXT X MILES sign shall be revised to show appropriate work zone distance.

7. The Engineer may require duplicate warning signs on the median side of divided highways where median width will permit and traffic volumes justify the signing.

8. All signs shall be constructed in accordance with the details found in the "Standard Highway Sign Designs for Texas," latest edition. Sign details not shown in this manual shall be shown in the plans or the Engineer shall provide a detail to the Contractor before the sign is manufactured.

9. The temporary traffic control devices shown in the illustrations of the BC sheets are examples. As necessary, the Engineer will determine the most appropriate traffic control devices to be used.

10. Where highway construction or maintenance work is being undertaken, other than mobile operations as defined by the Texas Manual on Uniform Traffic Control Devices, CSJ limit signs are required. CSJ limit signs are shown on BC(2). The OBEY WARNING SIGNS STATE LAW sign, STAY ALERT TALK OR TEXT LATER and the WORK ZONE TRAFFIC FINES DOUBLE sign with plaque shall be erected in advance of the CSJ limits. The BEGIN ROAD WORK NEXT X MILES, CONTRACTOR and END ROAD WORK signs shall be erected at or near the CSJ limits. For mobile operations, CSJ limit signs are not required.

11. Traffic control devices should be in place only while work is actually in progress or a definite need exists.

12. The Engineer has the final decision on the location of all traffic control devices.

13. Inactive equipment and work vehicles, including workers' private vehicles must be parked away from travel lanes. They should be as close to the right-of-way line as possible, or located behind a barrier or guardrail, or as approved by the Engineer.

WORKER SAFETY NOTES:

1. Workers on foot who are exposed to traffic or to construction equipment within the right-of-way shall wear high-visibility safety apparel meeting the requirements of ISEA "American National Standard for High-Visibility Apparel," or equivalent revisions, and labeled as ANSI 107-2004 standard performance for Class 2 or 3 risk exposure. Class 3 garments should be considered for high traffic volume work areas or night time work.

2. Except in emergency situations, flagger stations shall be illuminated when flagging is used at night.

COMPLIANT WORKZONE TRAFFIC CONTROL DEVICES

1. Only pre-qualified products shall be used. The "Compliant Work Zone Traffic Control Devices List" (CWZTCD) describes pre-qualified products and their sources.

2. Work zone traffic control devices shall be compliant with the Manual for Assessing safety Hardware (MASH).

THE DOCUMENTS BELOW CAN BE FOUND ON-LINE AT http://www.txdot.gov
COMPLIANT WORK ZONE TRAFFIC CONTROL DEVICES LIST (CWZTCD)
DEPARTMENTAL MATERIAL SPECIFICATIONS (DMS)
MATERIAL PRODUCER LIST (MPL)
ROADWAY DESIGN MANUAL - SEE "MANUALS (ONLINE MANUALS)"
STANDARD HIGHWAY SIGN DESIGNS FOR TEXAS (SHSD)
TEXAS MANUAL ON UNIFORM TRAFFIC CONTROL DEVICES (TMUTCD)
TRAFFIC ENGINEERING STANDARD SHEETS

Texas Department of Transportation

Traffic Safety Division Standard

BARRICADE AND CONSTRUCTION GENERAL NOTES AND REQUIREMENTS

BC(1)-21

FILE: bc-21.dgn	DN: TxDOT	CK: TxDOT	DW: TxDOT	CK: TxDOT
© TxDOT November 2002	CONT	SECT	JOB	
REVISIONS 4-03 7-13 9-07 8-14 5-10 5-21	DIST		COUNTY	

95

DATE:
FILE:

DISCLAIMER:
The use of this standard is governed by the "Texas Engineering Practice Act". No warranty of any kind is made by TxDOT for any purpose whatsoever. TxDOT assumes no responsibility for the conversion of this standard to other formats or for incorrect results or damages resulting from its use.

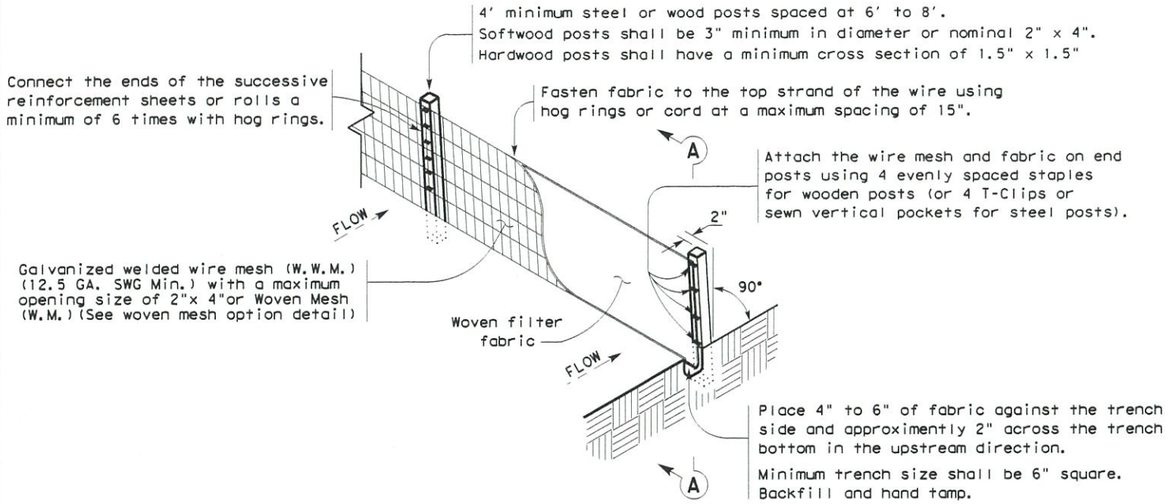

TEMPORARY SEDIMENT CONTROL FENCE

SCF

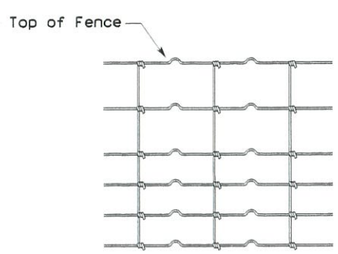

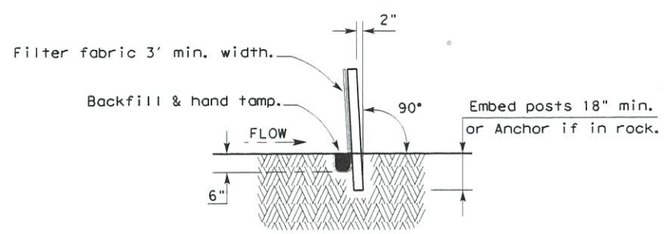

SECTION A-A

HINGE JOINT KNOT WOVEN MESH (OPTION) DETAIL

Galvanized hinge joint knot woven mesh (12.5 GA.SWG Min.) requires a minimum of five horizontal wires spaced at a maximum of 12 inches apart and all vertical wires spaced at a maximum of 12 inches apart.

SEDIMENT CONTROL FENCE USAGE GUIDELINES

A sediment control fence may be constructed near the downstream perimeter of a disturbed area along a contour to intercept sediment from overland runoff. A 2 year storm frequency may be used to calculate the flow rate to be filtered.

Sediment control fence should be sized to filter a maximum flow through rate of 100 GPM/FT^2. Sediment control fence is not recommended to control erosion from a drainage area larger than 2 acres.

LEGEND

Sediment Control Fence

SCF

GENERAL NOTES

1. Vertical tracking is required on projects where soil distributing activities have occurred unless otherwise approved.
2. Perform vertical tracking on slopes to temporarily stabilize soil.
3. Provide equipment with a track undercarriage capable of producing linear soil impressions measuring a minimum of 12" in length by 2" to 4" in width by 1/2" to 2" in depth.
4. Do not exceed 12" between track impressions.
5. Install continous linear track impressions where the minimum 12" length impressions are perpendicular to the slope or direction of water flow.

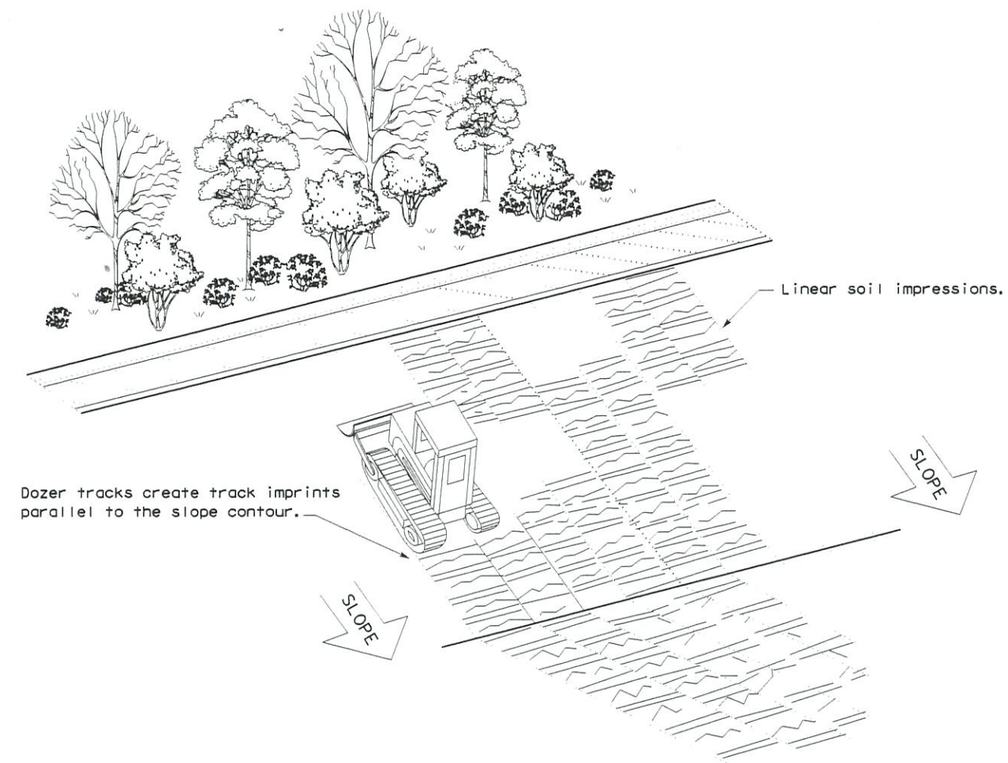

VERTICAL TRACKING

Texas Department of Transportation

Design Division Standard

TEMPORARY EROSION, SEDIMENT AND WATER POLLUTION CONTROL MEASURES

FENCE & VERTICAL TRACKING

EC(1)-16

FILE: ec116	DN: TxDOT	CK: KM	DW: VP / DN/CK: LS
© TxDOT: JULY 2016	CONT	SECT	JOB
REVISIONS	DIST		COUNTY

Sheet 28 of 29

DATE
FILE

DISCLAIMER:
The use of this standard is governed by the "Texas Engineering Practice Act". No warranty of any kind is made by TxDOT for any purpose whatsoever. TxDOT assumes no responsibility for the conversion of this standard to other formats or for incorrect results or damages resulting from its use.

DATE:
FILE:

TYPE 1

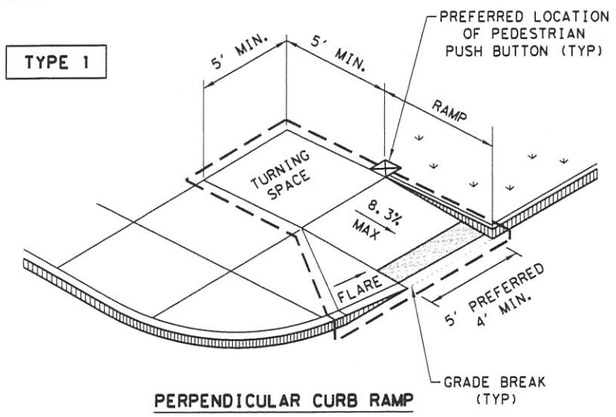

PERPENDICULAR CURB RAMP

TYPE 2

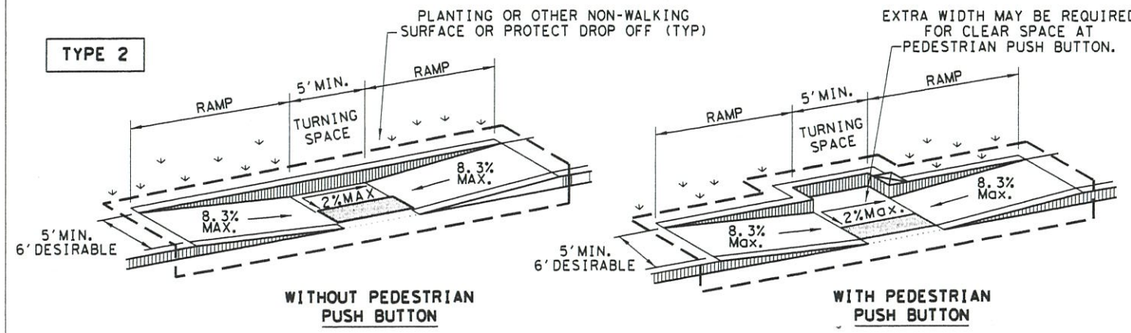

WITHOUT PEDESTRIAN PUSH BUTTON

WITH PEDESTRIAN PUSH BUTTON

PARALLEL CURB RAMP

TYPE 3

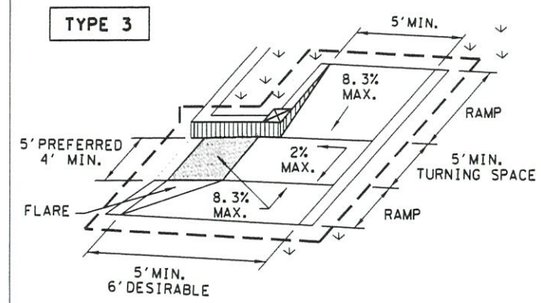

TYPE 6

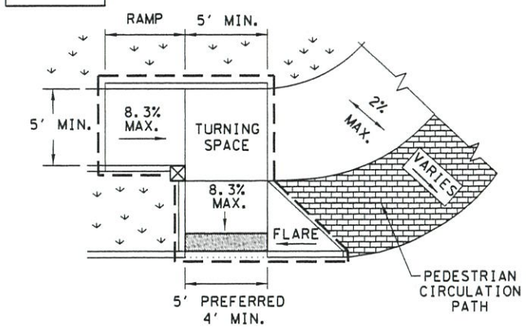

COMBINATION CURB RAMPS

TYPE 20

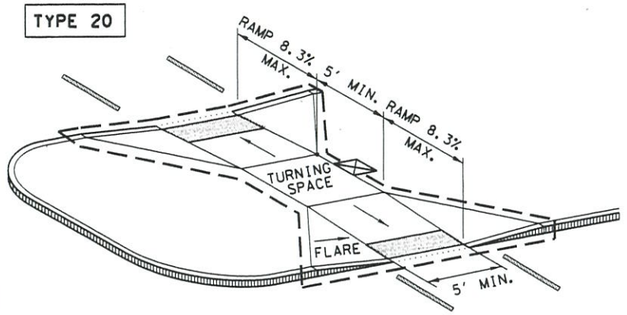

CURB RAMPS AT MEDIAN ISLANDS

TYPE 7

(SIDEWALK SET BACK FROM CURB)

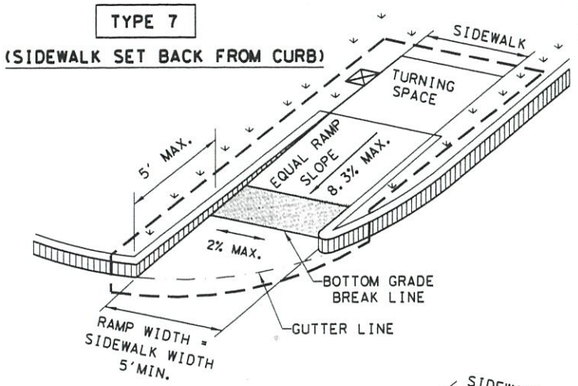

CROSS SLOPE NOT TO EXCEED 2% ON ANY PORTION OF RAMP, TURNING SPACE OR TRANSITION TO STREET.

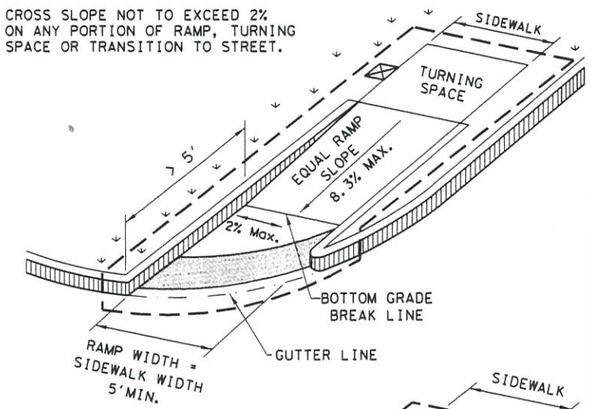

TYPE 10

(SIDEWALK ADJACENT TO CURB)

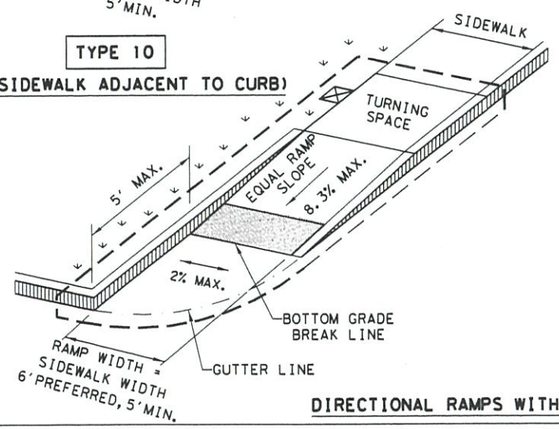

CROSS SLOPE NOT TO EXCEED 2% ON ANY PORTION OF RAMP, TURNING SPACE OR TRANSITION TO STREET.

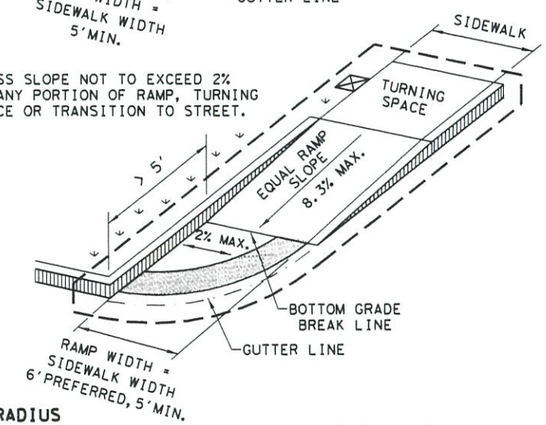

DIRECTIONAL RAMPS WITHIN RADIUS

TYPE 5

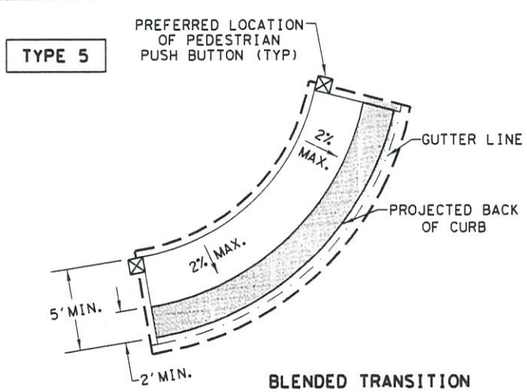

BLENDED TRANSITION

(FLUSH LANDING)

TYPE 21

INSTALL DETECTABLE WARNING SURFACE AT EACH END OF THE CUT-THROUGH RAMP WITH A MINIMUM 2' USUAL SIDEWALK SURFACE BETWEEN. IF MEDIAN IS LESS THAN 6' WIDE, ELIMINATE DETECTABLE WARNING SURFACES.

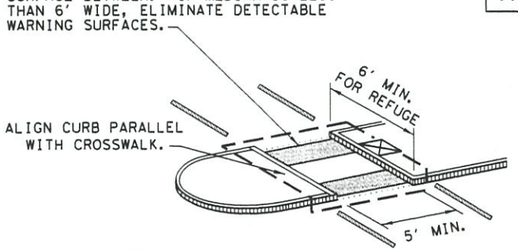

NOTE: CURB DETAILS ARE SHOWN ELSEWHERE IN THE PLANS.

TYPE 22

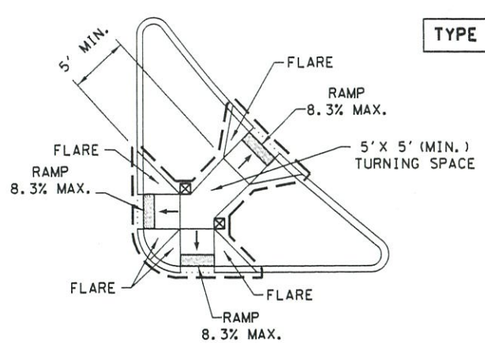

COMBINATION ISLAND RAMPS

BOTTOM GRADE BREAK OF CURB RAMP WILL NORMALLY BE AT GUTTER LINE. SURFACE SLOPES AT GRADE BREAKS SHALL BE FLUSH.

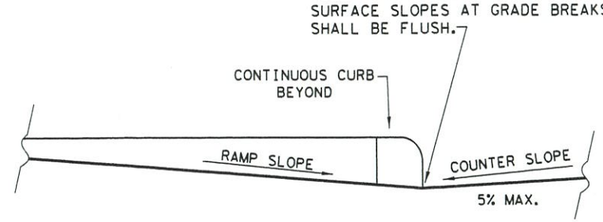

TYPICAL SECTION OF PERPENDICULAR CURB RAMP AT CONNECTION TO ROADWAY

NOTES / LEGEND:

SEE GENERAL NOTES ON SHEET 2 OF 4 FOR MORE INFORMATION.

DENOTES PLANTING OR NON-WALKING SURFACE NOT PART OF PEDESTRIAN CIRCULATION PATH.

DETECTABLE WARNING SURFACE

DENOTES PREFERRED LOCATION OF PEDESTRIAN PUSH BUTTON IF APPLICABLE.

GUTTER LINE

GRADE BREAK

RAMP LIMITS OF PAYMENT

SHEET 1 OF 4

Texas Department of Transportation

Design Division Standard

PEDESTRIAN FACILITIES CURB RAMPS

PED-18

FILE: ped18	DN: TxDOT	DW: VP	
© TxDOT: MARCH, 2002	CONT	SECT	JOB
REVISIONS REVISED 08, 2005 REVISED 06, 2012 REVISED 01, 2018	DIST		COUNT

Sheet 29 of 29